Integration of IEEE 802.16 and Carrier Ethernet

Document Number:
IEEE 802.16-13-0049-00-000r
Date Submitted:
2013-03-12
Source:
Roger B. Marks
Consensii LLC*
4040 Montview Blvd
Denver CO 80207 USA
*<http://standards.ieee.org/faqs/affiliationFAQ.html>
Voice: +1 619 393 1913
E-mail: roger@consensii.com
Re:
Call for Contributions IEEE 802.16-13-0032-01-Gdoc
Base Contribution:
If this presentation accompanies a base 802.16 contribution, cite its document number.
Purpose:
To provide a tutorial on Carrier Ethernet as applicable to the P802.16r project and to stimulate and support discussion within the P802.16r project regarding Carrier Ethernet requirements.
Notice:
This document does not represent the agreed views of the IEEE 802.16 Working Group or any of its subgroups. It represents only the views of the participants listed in the "Source(s)" field above. It is offered as a basis for discussion. It is not binding on the contributor(s), who reserve(s) the right to add, amend or withdraw material contained herein.
Copyright Policy:
The contributor is familiar with the IEEE-SA Copyright Policy <http://standards.ieee.org/IPR/copyrightpolicy.html>.
Patent Policy:
The contributor is familiar with the IEEE-SA Patent Policy and Procedures:
<http://standards.ieee.org/guides/bylaws/sect6-7.html#6> and <http://standards.ieee.org/guides/opman/sect6.html#6.3>.
Further information is located at <http://standards.ieee.org/board/pat/pat-material.html> and <http://standards.ieee.org/board/pat >.

Integration of IEEE 802.16 and Carrier Ethernet

- contribution IEEE 802.16-13-0010 (“Carrier Ethernet 2.0 Requirements for P802.16r”) said:
  - *An understanding of the deployment architecture is relevant to the understanding of the Carrier Ethernet 2.0 Requirements and may be relevant to establish other general aspects of the required functionality to be specified in the P802.16r project.*
- This contribution is a followup.
- Carrier Ethernet tutorial information is included.

Overview

- IEEE 802.16 can be enhanced to provide services to SS-side Carrier Ethernet users
- IEEE 802.16 can be enhanced to leverage BS-side Carrier Ethernet networks
- Can support independent 802.16 operators
- Can support Carrier Ethernet network operators who want to add wireless

Carrier Ethernet Network (CEN)

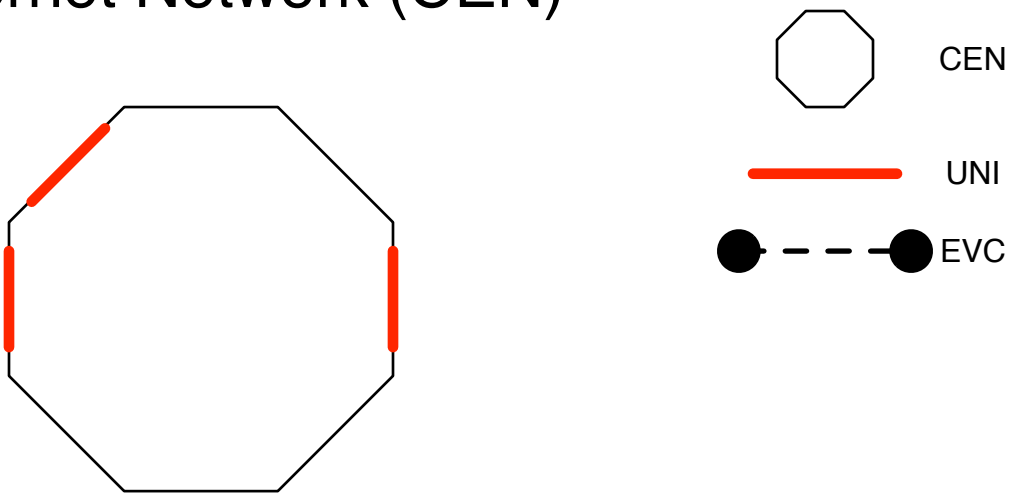

- CEN interconnects customer-edge Ethernet networks via Ethernet Virtual Connection (EVC)
- Customer-edge networks attach at a User-Network Interface (UNI)
- Attributes of UNI, EVC, Services, etc. are specified by Metro Ethernet Forum

Copyright © 2013 Consensii LLC

Ethernet Private Line (EPL) Service

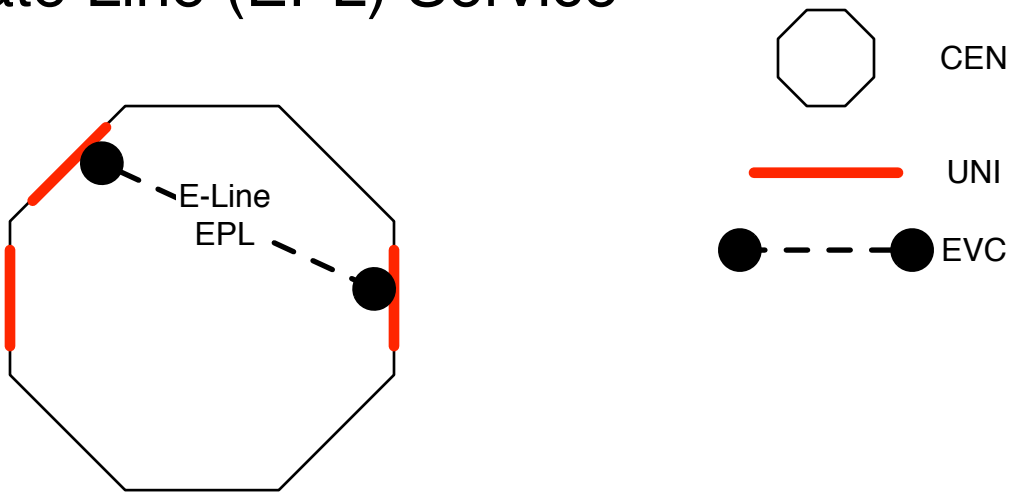

- Service Type: E-Line (point-to-point)
- Service Basis: port-based

Copyright © 2013 Consensii LLC

Ethernet Private LAN (EP-LAN) Service

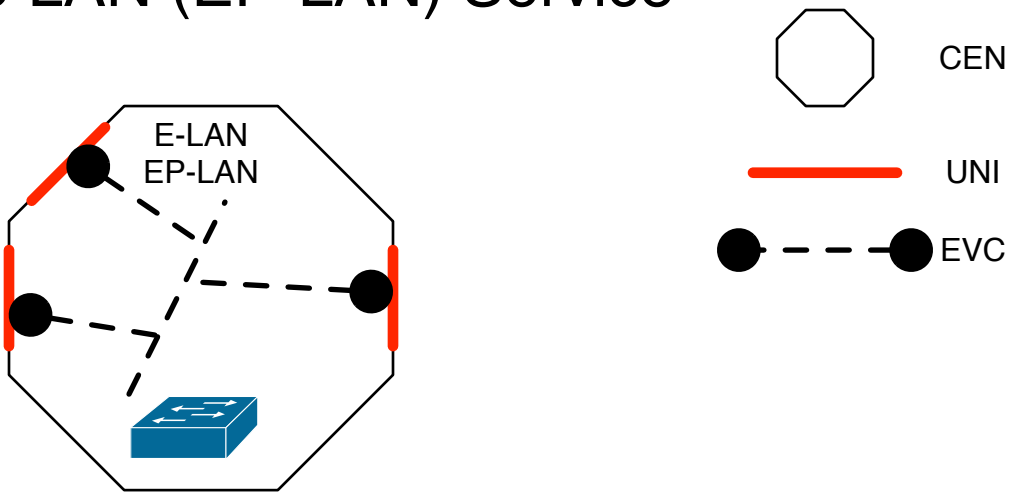

- Service Type: E-LAN (multipoint-to-multipoint)
- Service Basis: port-based
- Acts as a bridge

Copyright © 2013 Consensii LLC

Ethernet Private Tree (EP-Tree) Service

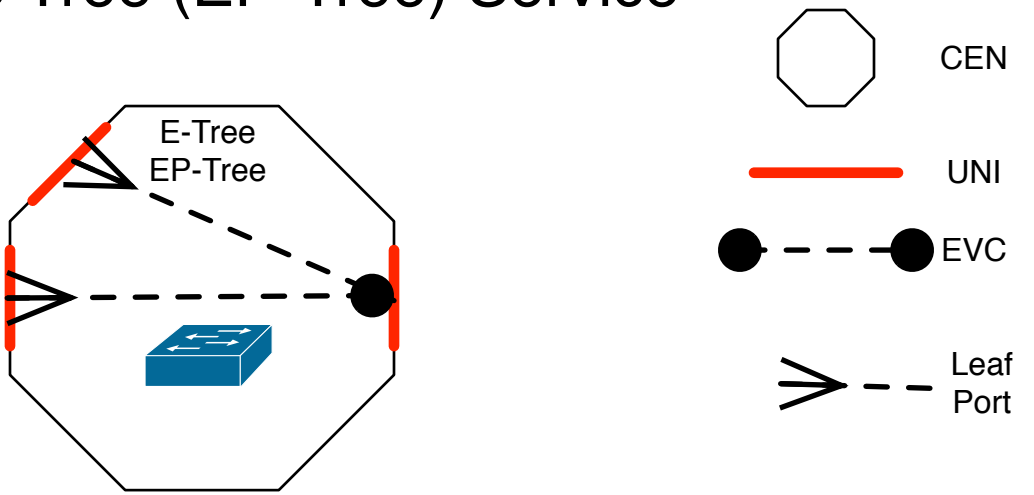

- Service Type: E-Tree (point-to-multipoint)
- Service Basis: port-based
- Acts as a bridge (but leaves forward only to roots)

Copyright © 2013 Consensii LLC

Ethernet Virtual Private Line (EVPL)

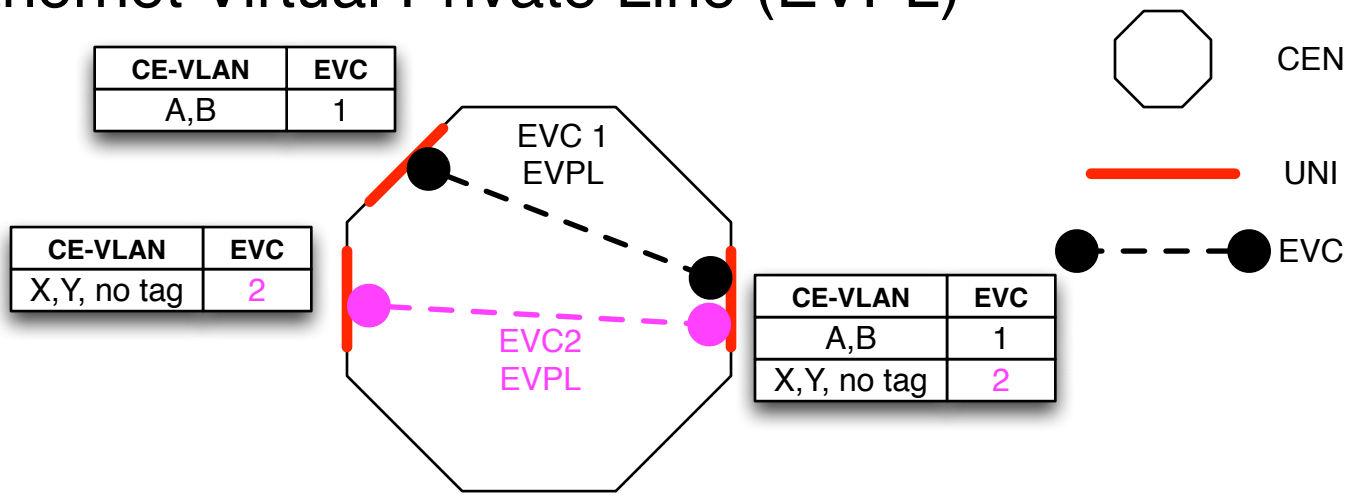

- Service Type: E-Line (point-to-point)
- Service Basis: VLAN-based
- Service Multiplexing by CE-VLAN Tag (C-TAG) [CE: Customer-Edge]
- V-LAN Coordination
- Not transparent to customer VLAN

Copyright © 2013 Consensii LLC

Ethernet Virtual Private LAN (EVP-LAN) Service

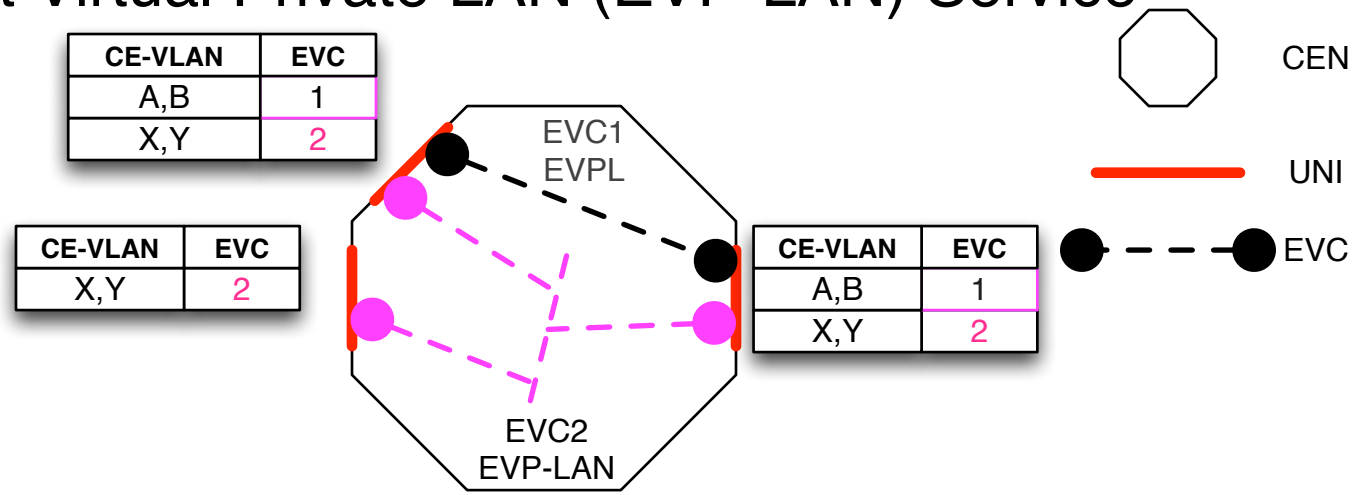

- Service Type: E-Tree (point-to-multipoint)
- Service Basis: VLAN-based
- Service Multiplexing by CE-VLAN Tag
- V-LAN Coordination
- Not transparent to customer VLAN
- Acts as a bridge

Copyright © 2013 Consensii LLC

Ethernet Virtual Private Tree (EVP-Tree) Service

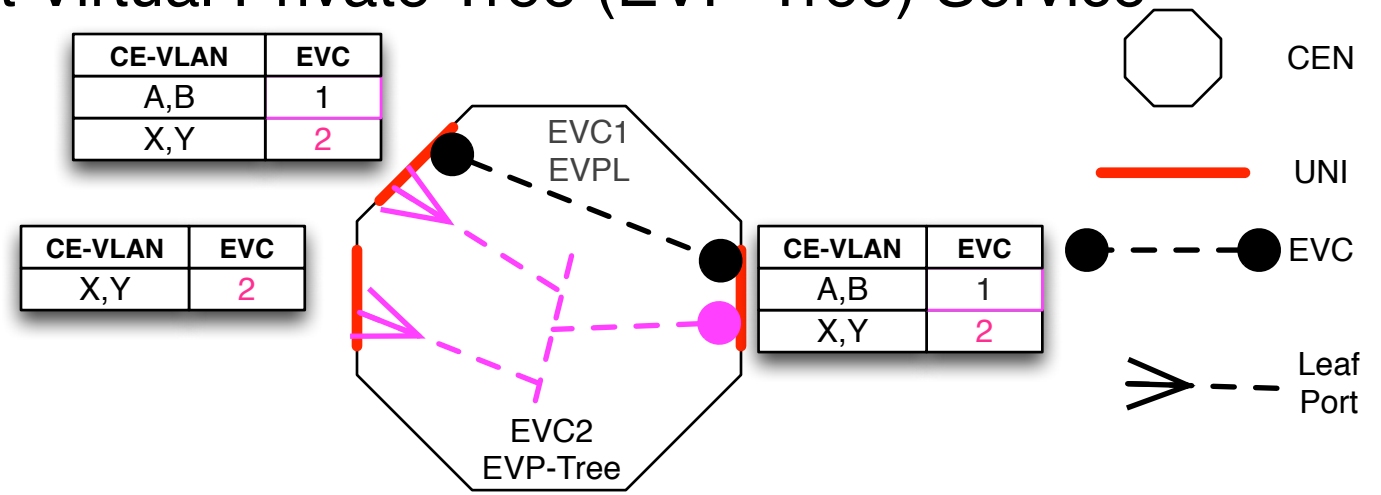

- Service Type: E-LAN (multipoint-to-multipoint)
- Service Basis: VLAN-based
- Service Multiplexing by CE-VLAN Tag
- V-LAN Coordination
- Not transparent to customer VLAN
- Acts as a bridge (but leaves forward only to roots)

Copyright © 2013 Consensii LLC

External Network-Network Interface (ENNI)

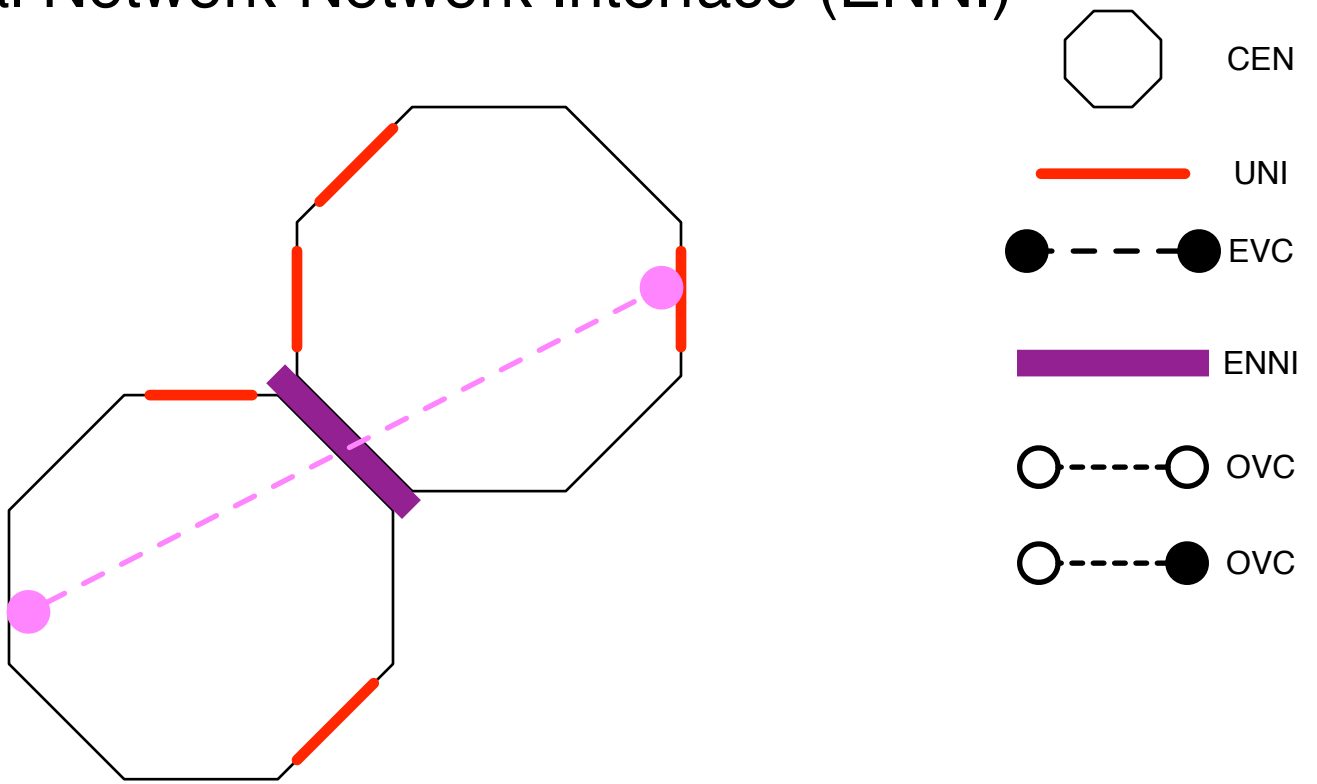

- Interconnection between to Operator CENs
- Supports EVCs with ports in multiple CENs
- Assembled from Operator Virtual Connections (OVCs)

Copyright © 2013 Consensii LLC

Point to Point OVCs

From	CE-VLAN	Map To
1	X	OVC 1-2

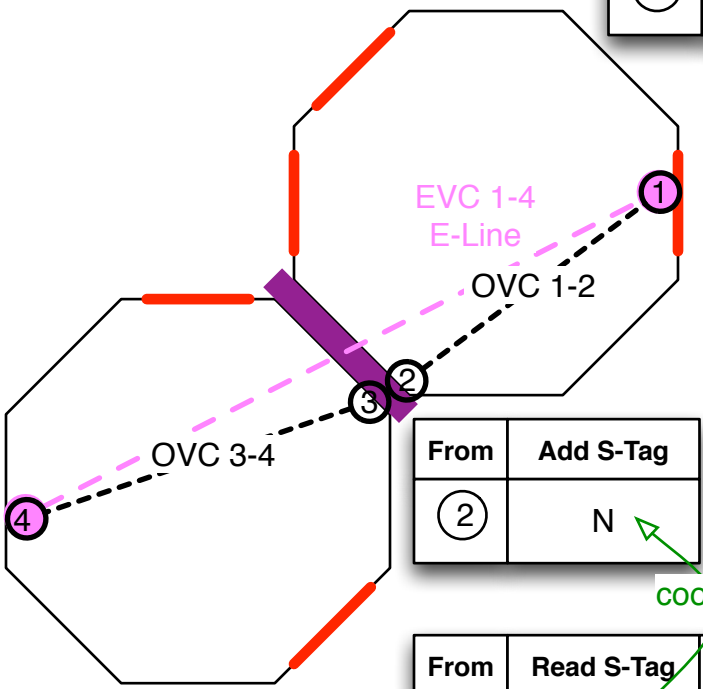

From	CE-VLAN
4	X

From	Add S-Tag
2	N

coordinated

From	Read S-Tag	Map To
3	N	OVC 3-4

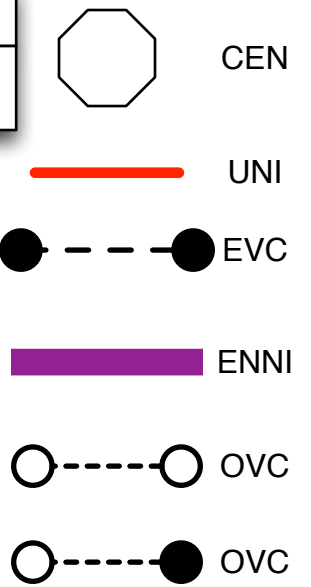

Copyright © 2013 Consensii LLC

Point to Multipoint OVCs

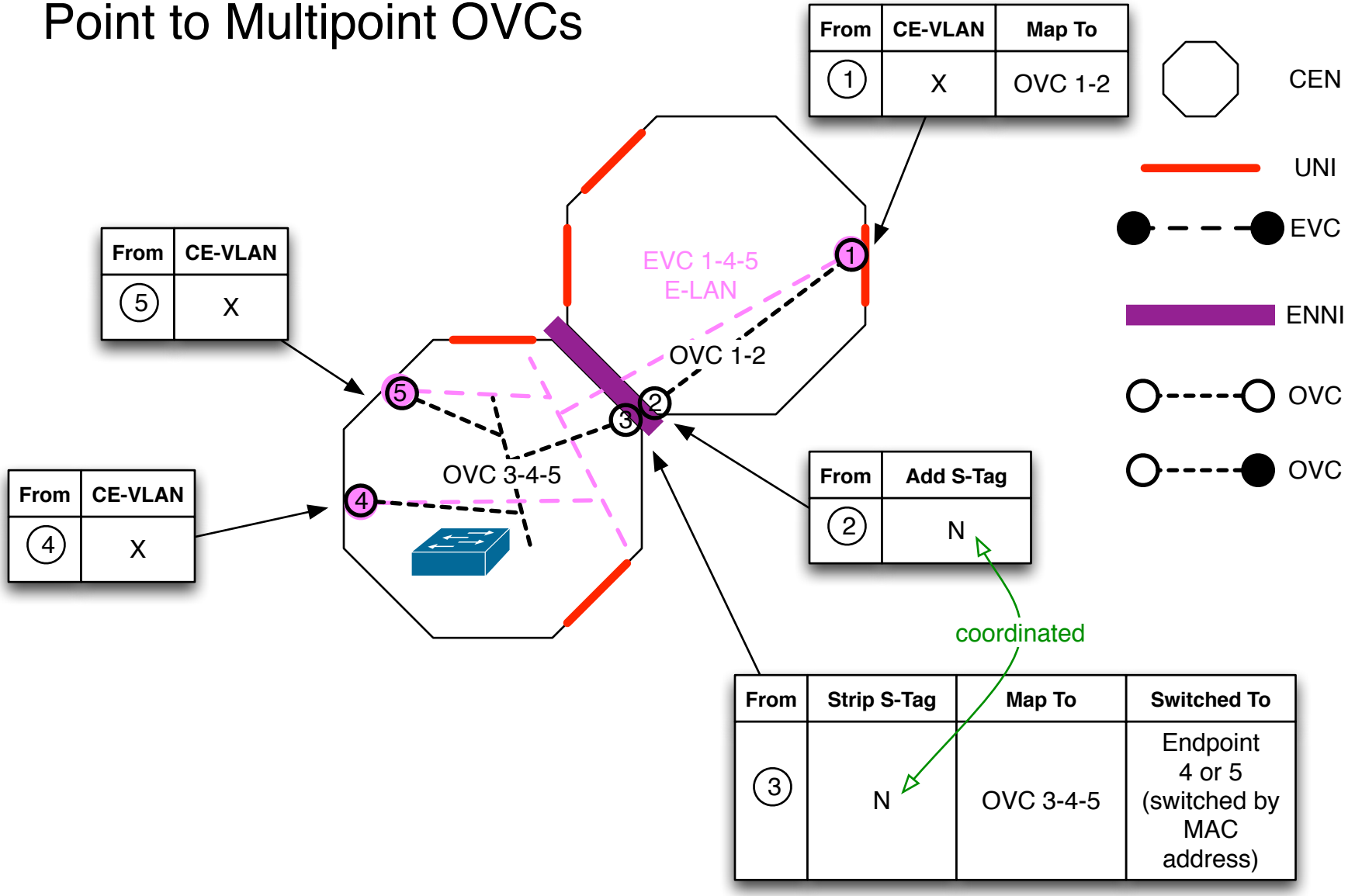

Copyright © 2013 Consensii LLC

802.16 Access Network

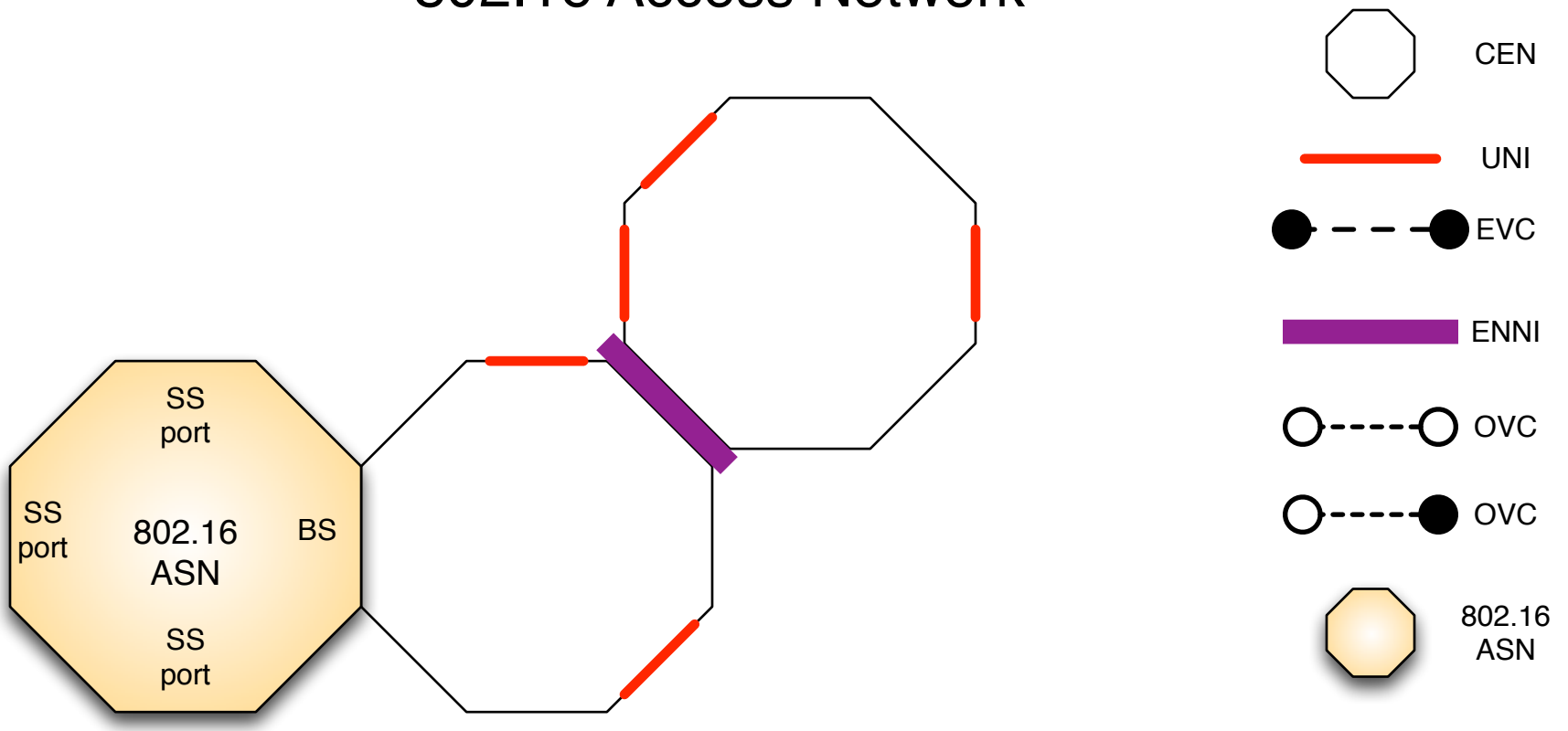

Copyright © 2013 Consensii LLC

802.16 Use Case 1: Ethernet Bridge

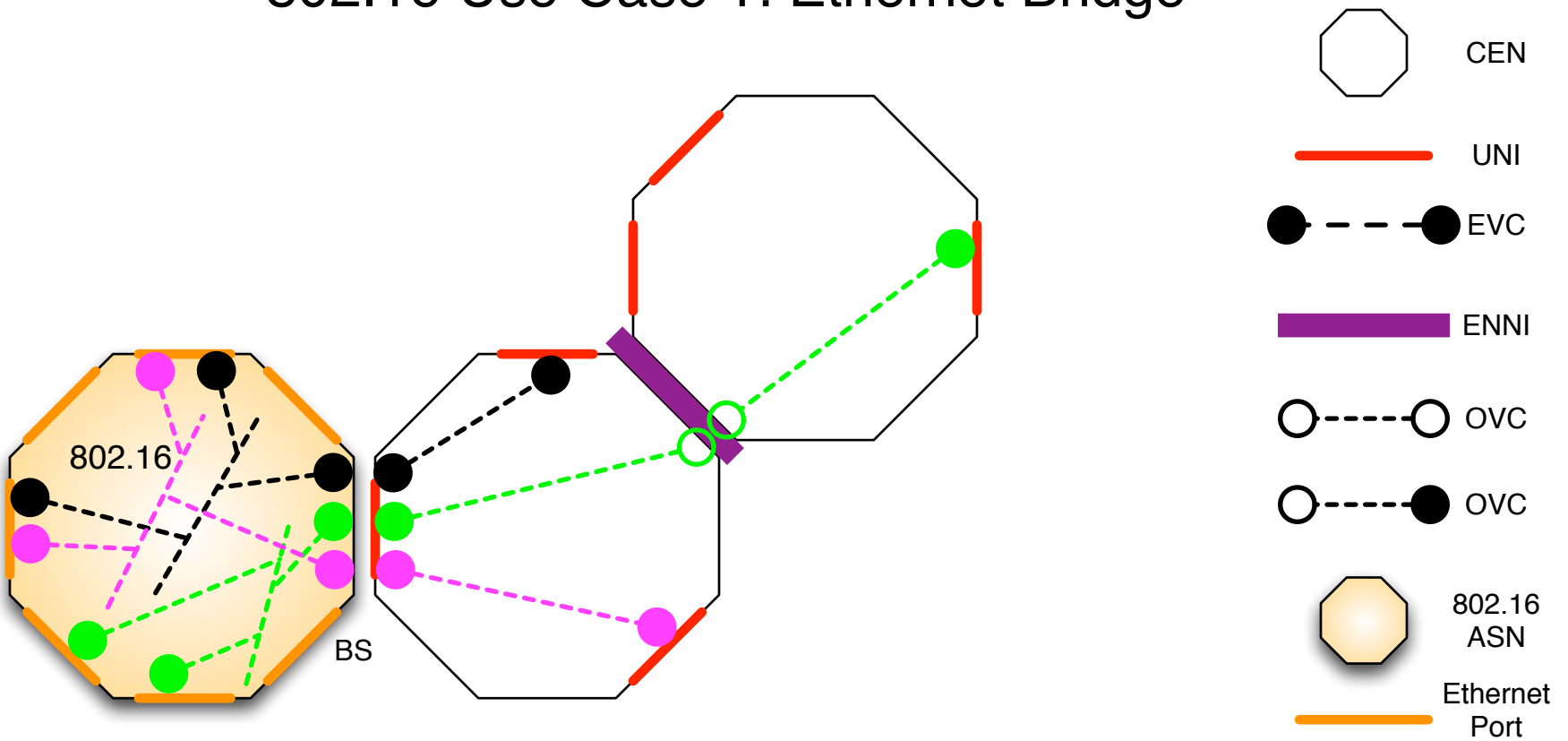

Connection to CEN	UNI with Service Multiplexing
Ports	Ethernet (not UNI-qualified)
Function	Ethernet beyond the UNI
Operator	Independent 802.16 Operator
Certification	none
SLA	difficult

Copyright © 2013 Consensii LLC

802.16 Use Case 1+: UNI-Like Ethernet Bridge

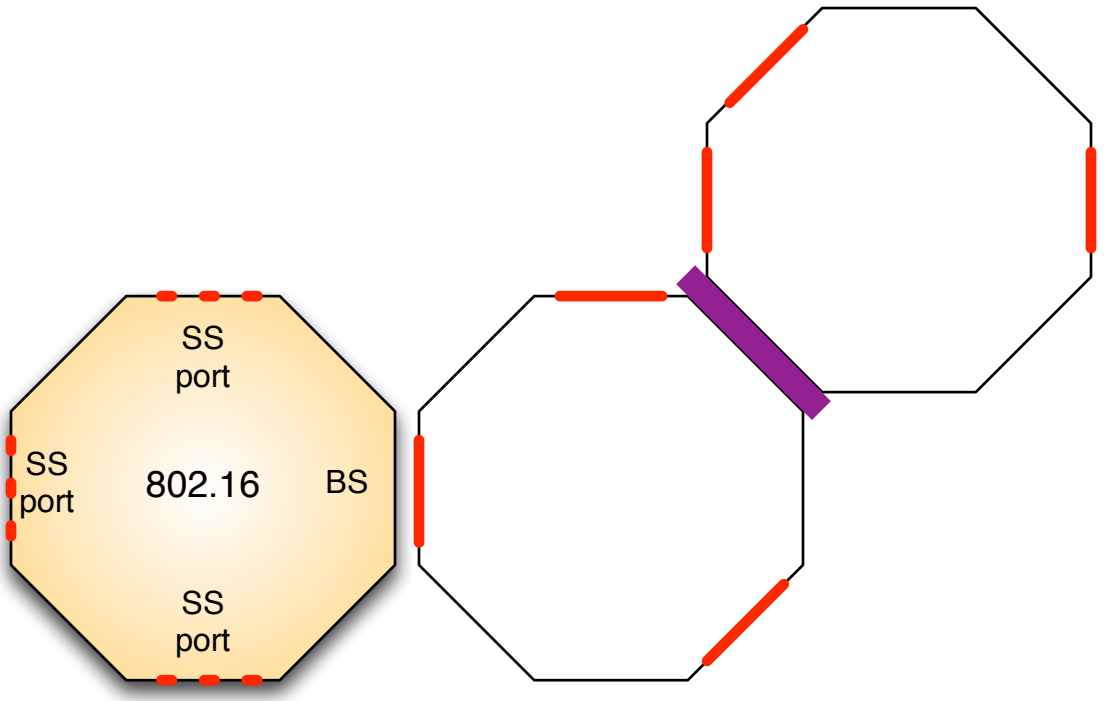

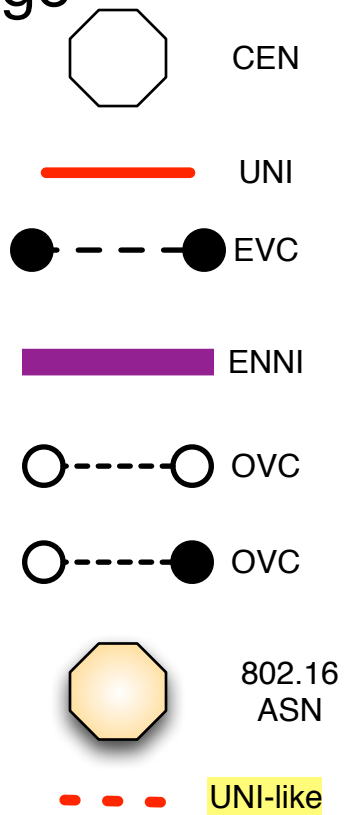

Connection to CEN	UNI with Service Multiplexing
Ports	UNI-equivalent
Function	UNI-equivalent beyond the wired CEN
Operator	Independent 802.16 Operator
Certification	self (initially)
SLA	difficult

Copyright © 2013 Consensii LLC

802.16 Use Case 2: CEN Expansion

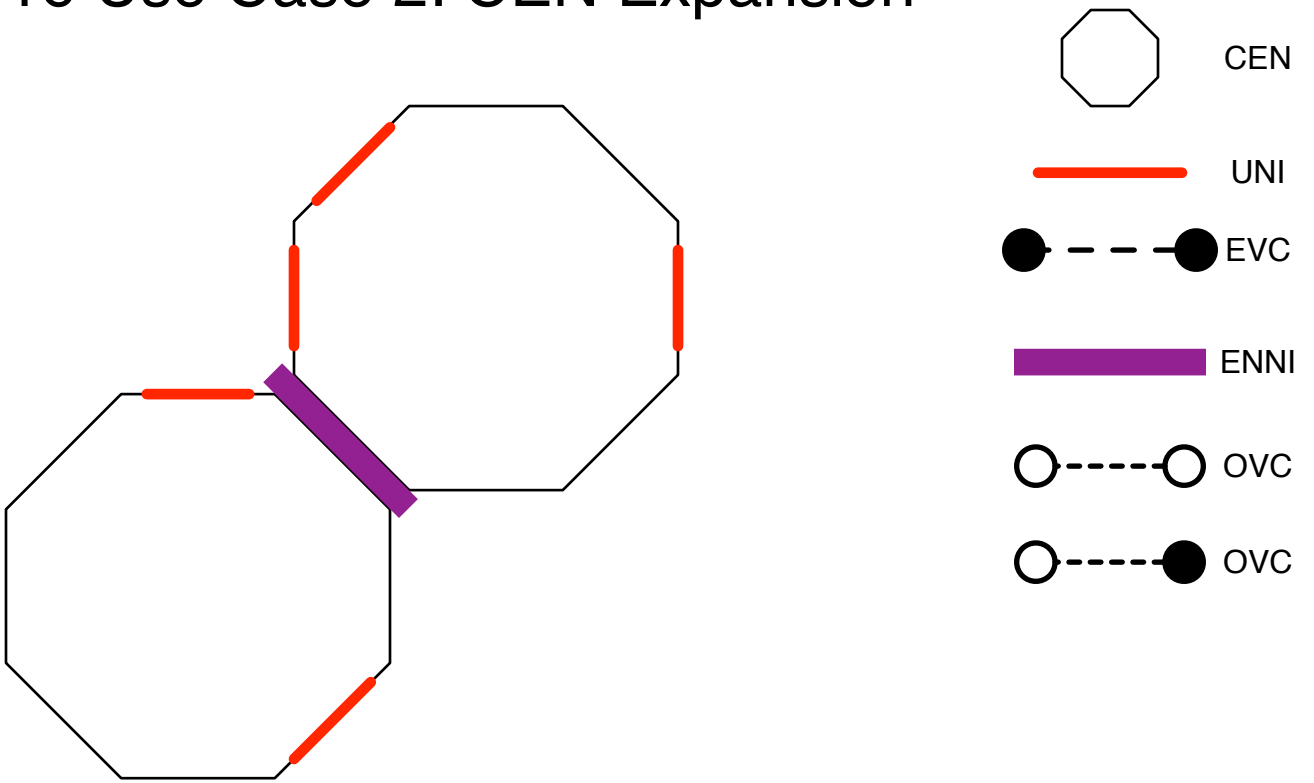

Copyright © 2013 Consensii LLC

802.16 Use Case 2+: Standalone CEN

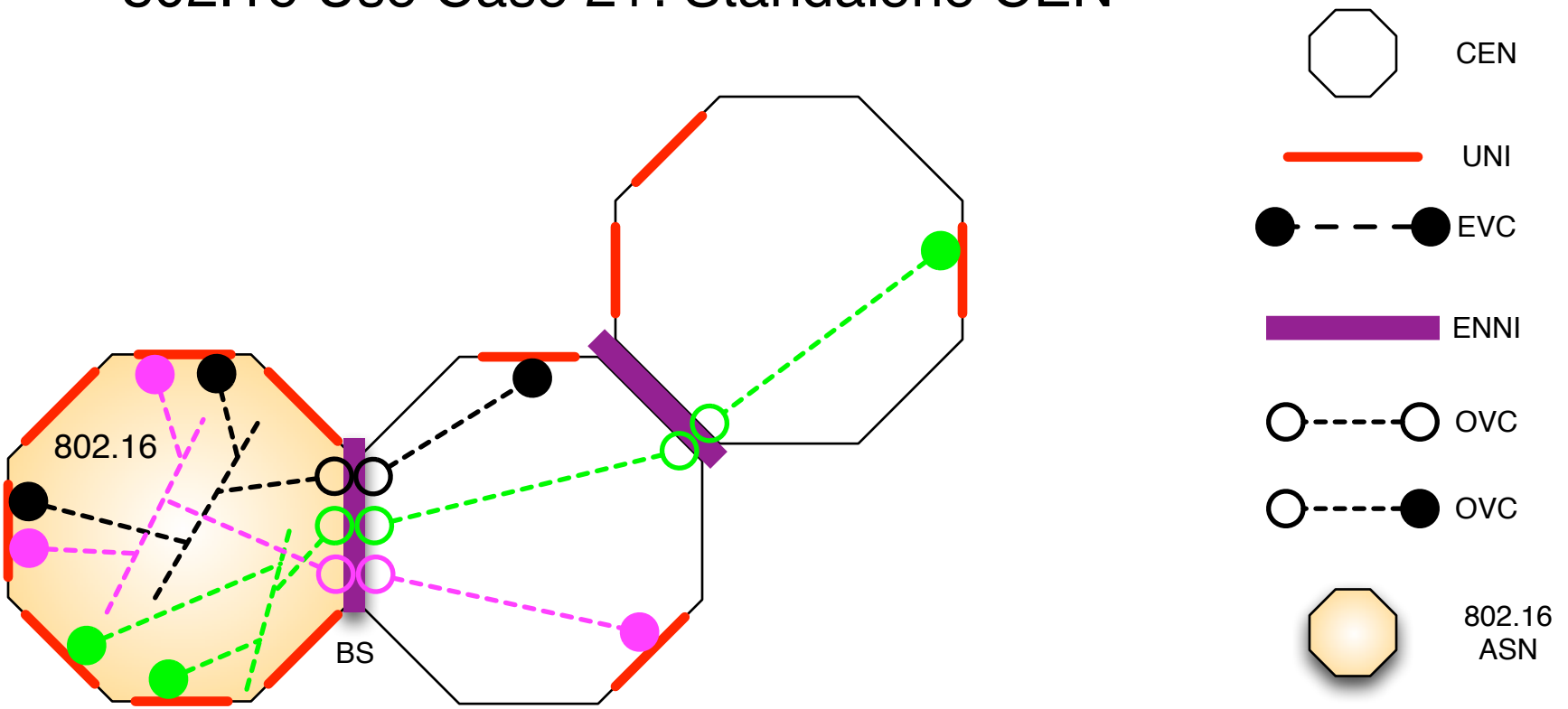

Connection to CEN	ENNI
Ports	UNI
Service	EVC beyond the wired CEN
Operator	Independent 802.16 Operator
Certification	MEF
SLA	MEF-specified

Copyright © 2013 Consensii LLC

802.16 Network Backhaul Architecture - Merged Control and Data Path

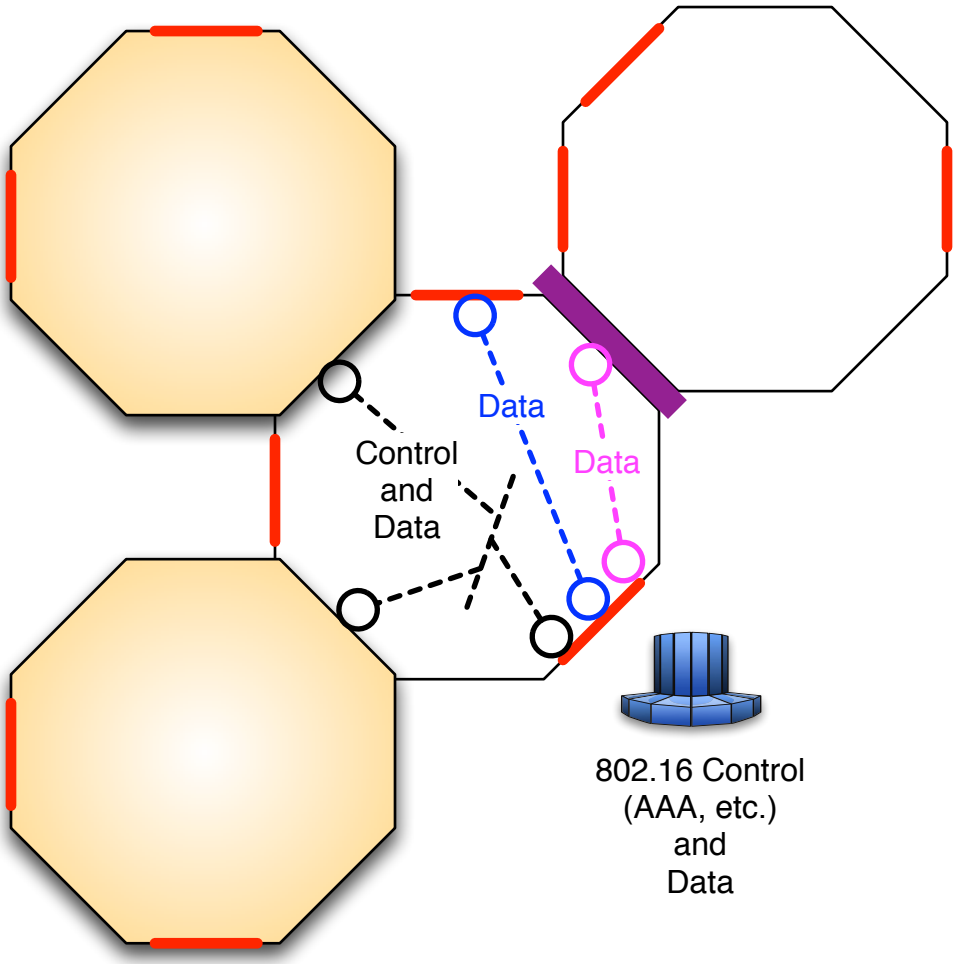

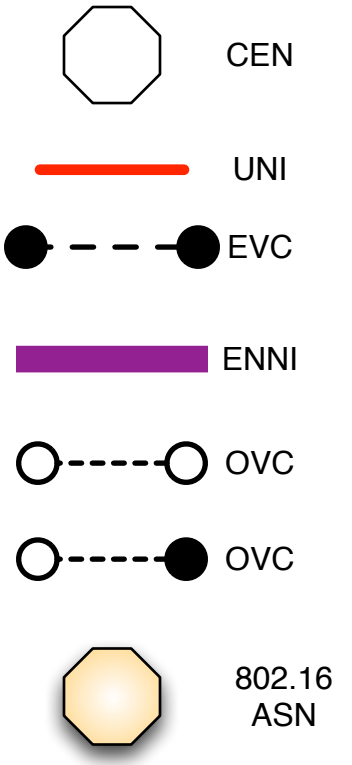

Copyright © 2013 Consensii LLC

802.16 Network Backhaul Architecture - Separate Control and Data Path

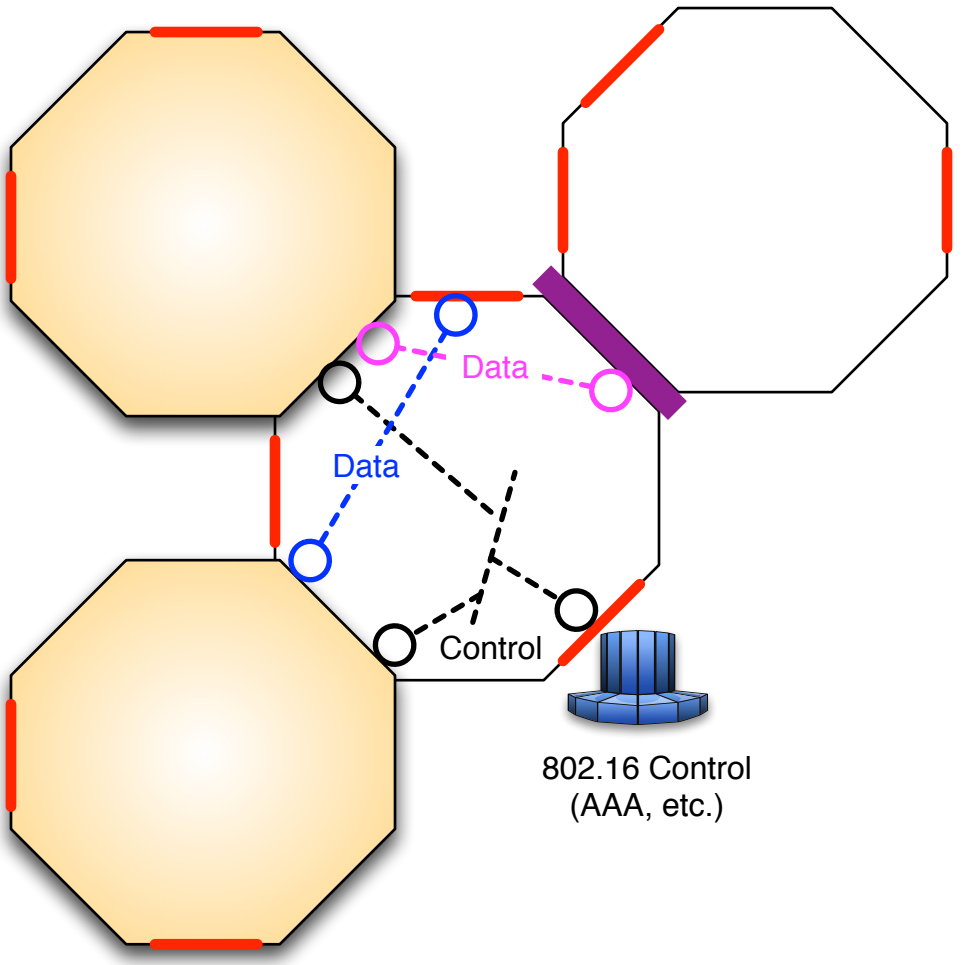

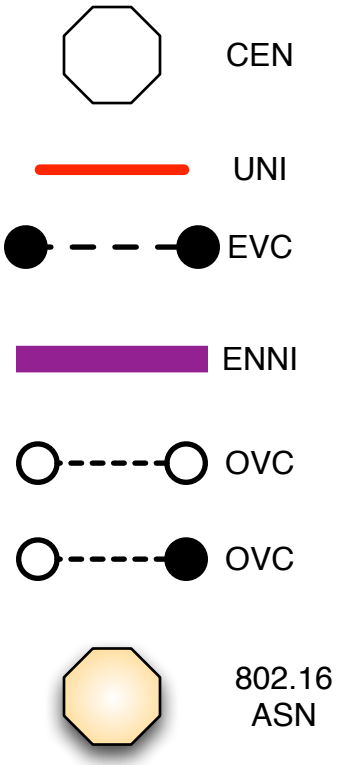

Copyright © 2013 Consensii LLC

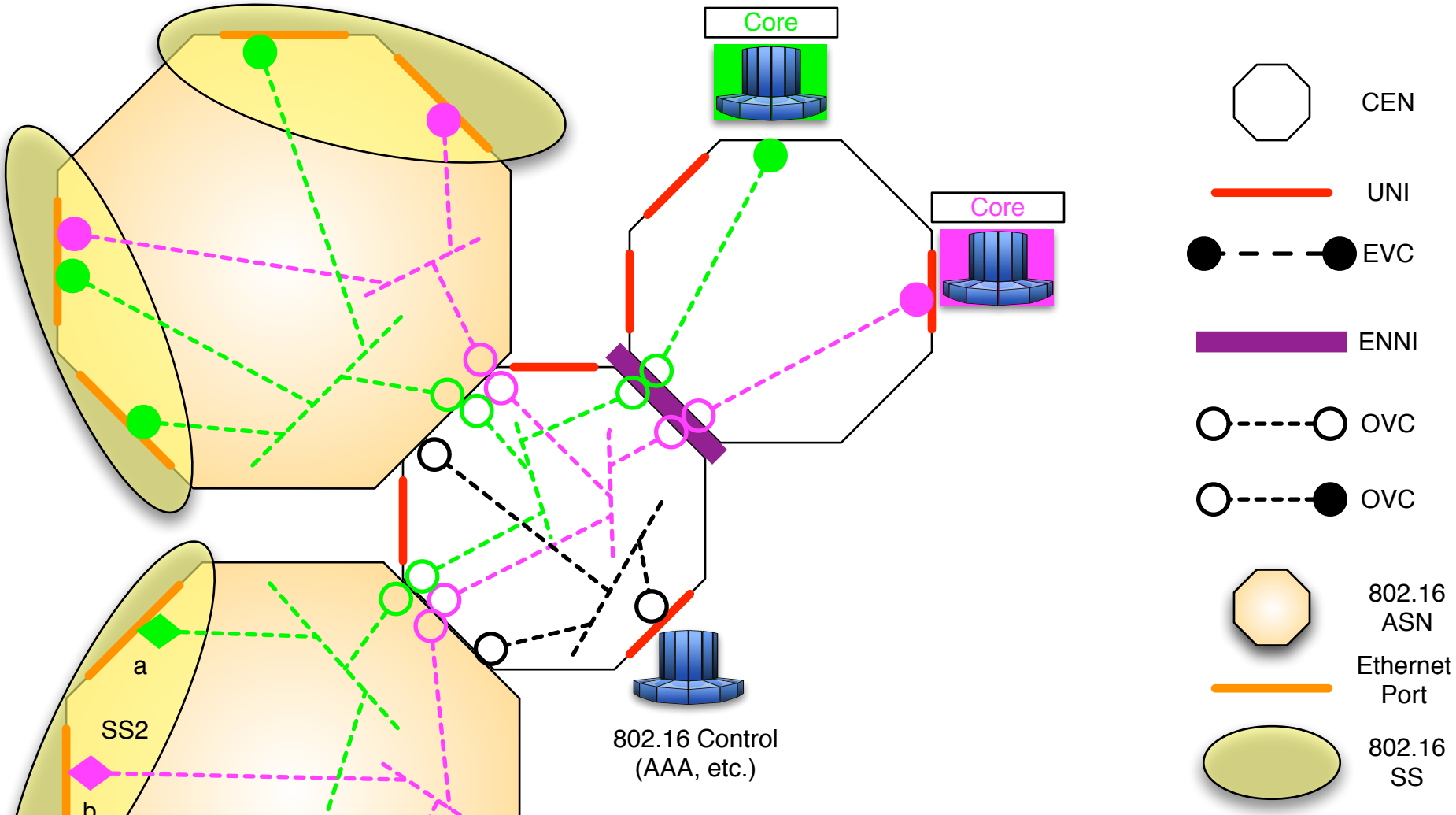

Network Architecture with Typical Scenario

Copyright © 2013 Consensii LLC

Bridging in 802.16

- Bridging is not explicit in the 802.16 architectural model

- 802.16 does not specify bridge operation
  - ISS support specified in 802.16k (amendment 802.1D)
    - does not directly specify bridging
    - RFC 5692 specifies bridging (details below)
    - 802.1Q and VLAN-aware bridging not addressed

Copyright © 2013 Consensii LLC

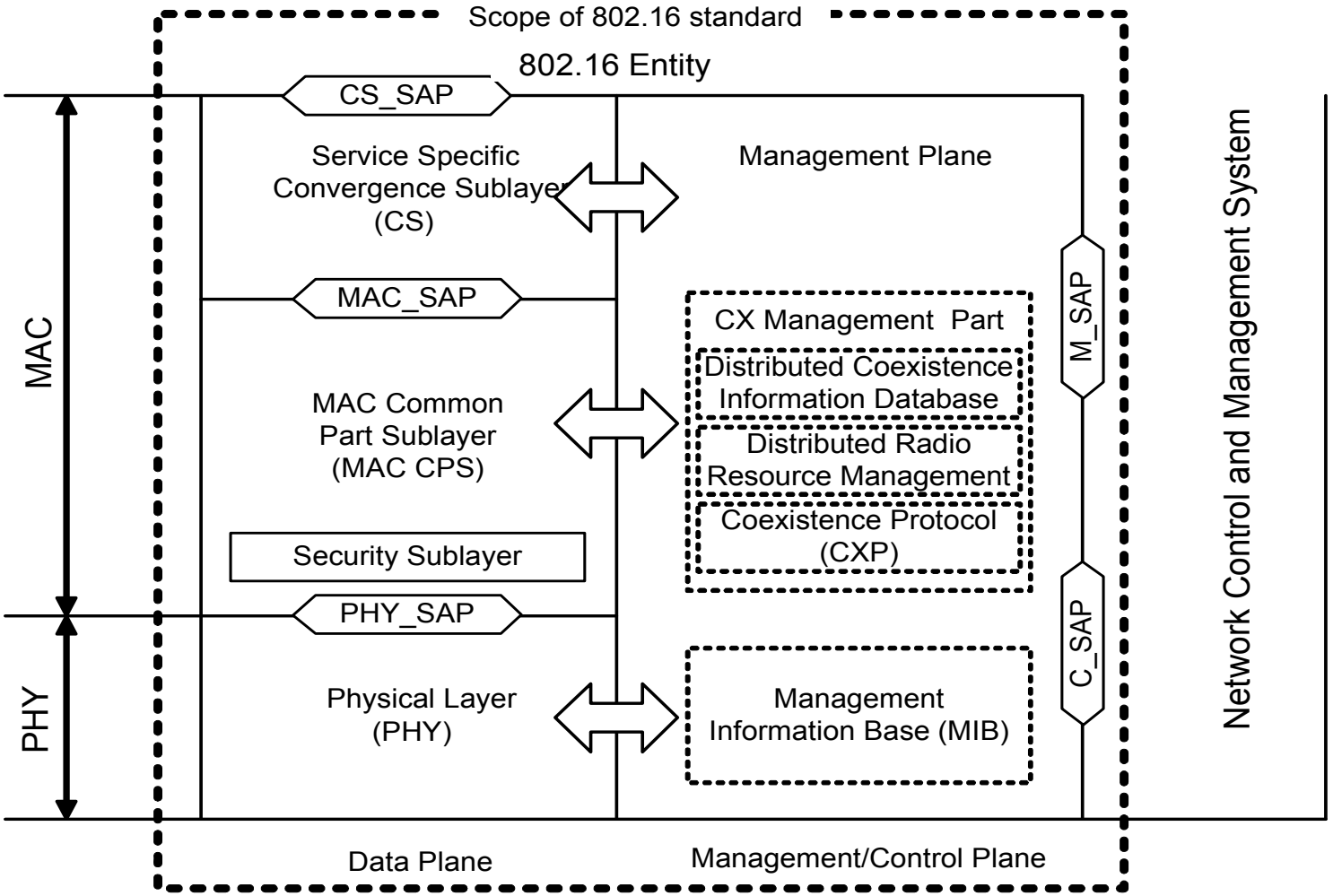

Figure 1-1—IEEE 802.16 protocol layering, showing SAPs

Copyright © 2013 Consensii LLC

Bridging Issues

- bridging forwards frames to bridge ports
  - 802.16 MAC transports data on connections
  - connections are currently identified by SS, not by end port
  - connection should connect bridge port to SS port

- possible solutions:
  (1) forward frames from BS to a single port per SS
  -specified in RFC 5692
  -unnecessary and duplicative bridging burden in SS
  -add'l bridging management over the air
  (2) insert a tag (such as S-Tag)
  (3) bridge-centric architecture using port identification

Copyright © 2013 Consensii LLC

Bridge Solution (1): single port per SS

RFC 5692 ("Transmission of IP over Ethernet over IEEE 802.16 Networks") says:

- "The BS MUST forward all the service flows belonging to one SS to one port of the network-side bridging function."

- "If the Ethernet over IEEE 802.16 is extended to multiple end stations behind the SS…, then the SS SHOULD support bridging according to [802.1D] and its amendment [802.16k], a.k.a. subscriber-side bridge, between all its subscriber-side ports and the IEEE 802.16 air link."

Notes:

- In RFC 5692, bridge may serve multiple BSs; here only one
- RFC 5692 is not referenced in IEEE 802.16-2012

Copyright © 2013 Consensii LLC

Bridge Solution (2): insert a tag

- An additional port identification field could be inserted into the frame
  - for example, as an S-Tag
- This extra over-the-air multiplexing overhead is unnecessary, since the connection methodology already provides path separation.

Copyright © 2013 Consensii LLC

Bridge-Centric Architecture

Bridge
Solution (3)

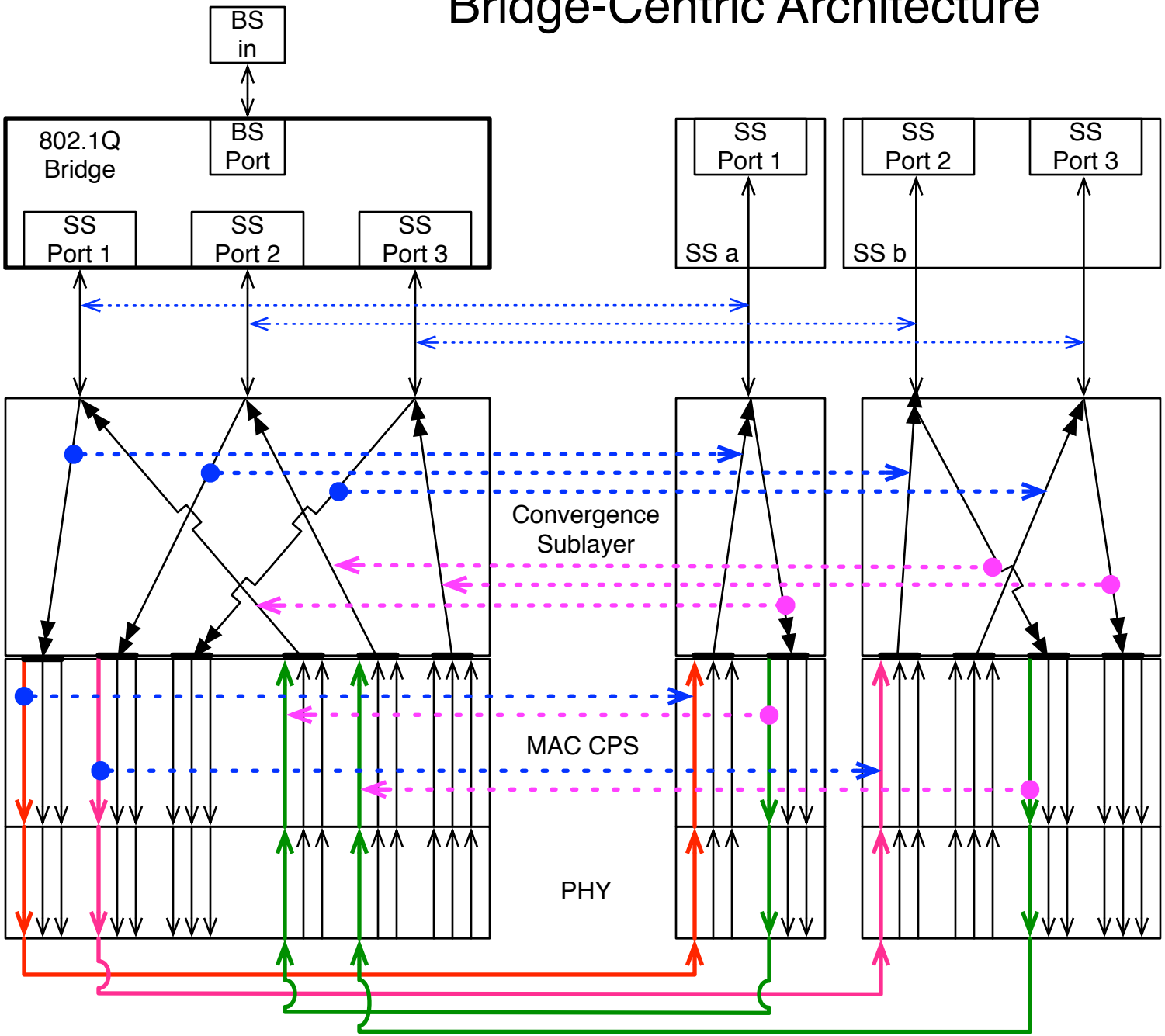

multiple SS Ports per SS
one SS per SS Port

One CS instance per SS
Port-aware CS

unidirectional
Connections

multiple Connections per SS Port
one SS Port per Connection
Connections labeled by SS Port

all Connections linked via PHY
[several examples highlighted]

Copyright © 2013 Consensii LLC

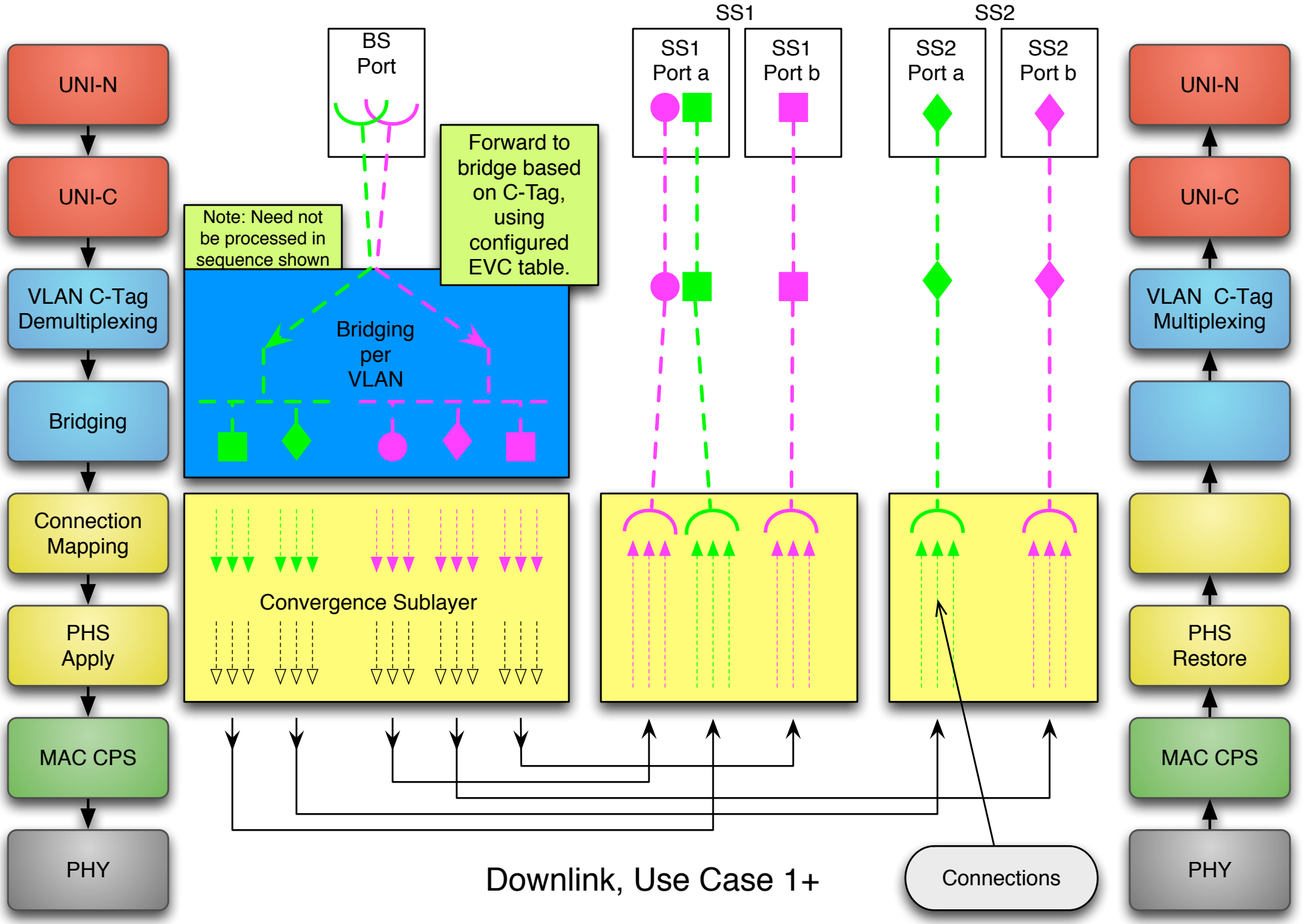

Downlink, Use Case 1+

Copyright © 2013 Consensii LLC

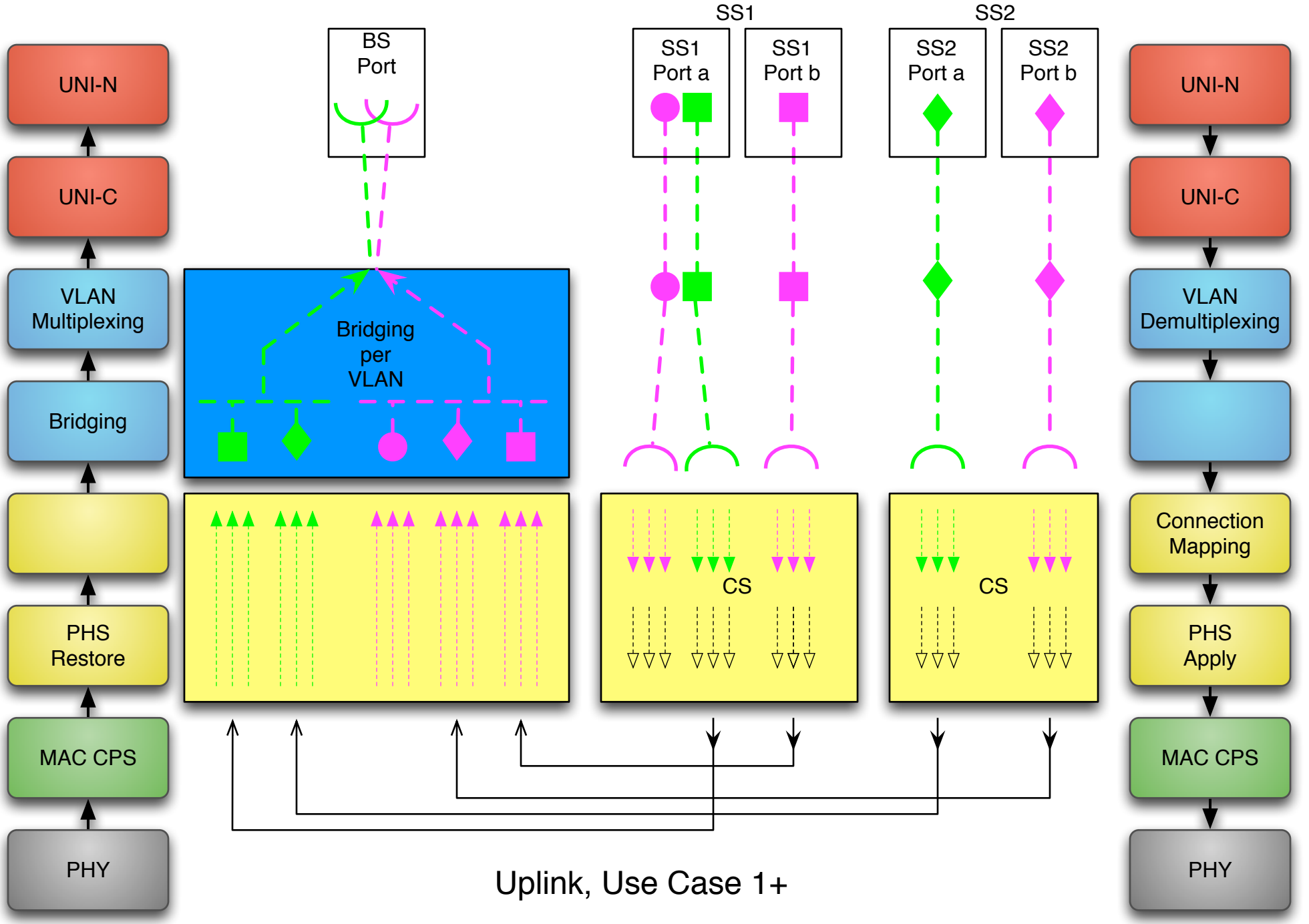

Uplink, Use Case 1+

Copyright © 2013 Consensii LLC

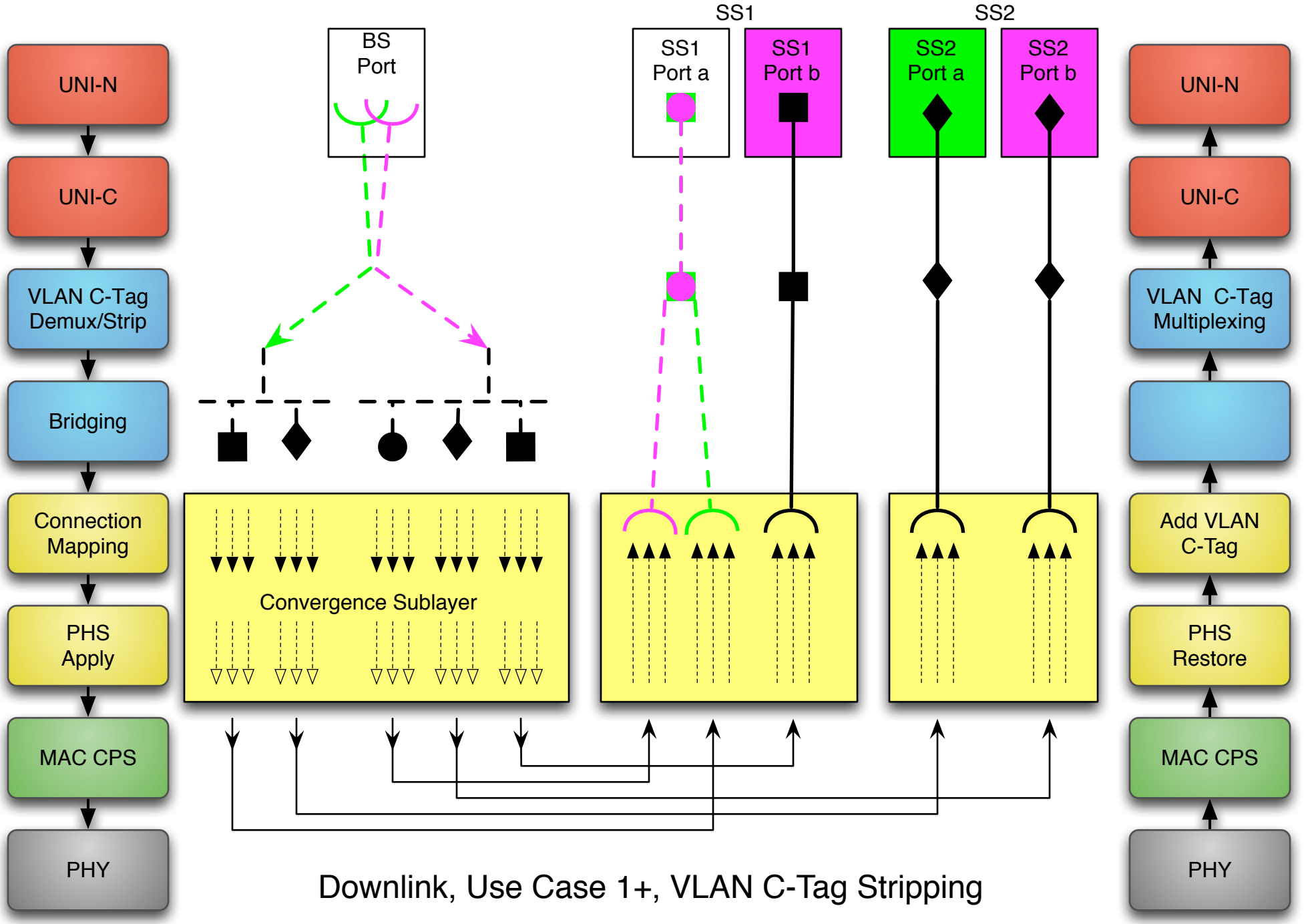

Downlink, Use Case 1+, VLAN C-Tag Stripping

Copyright © 2013 Consensii LLC

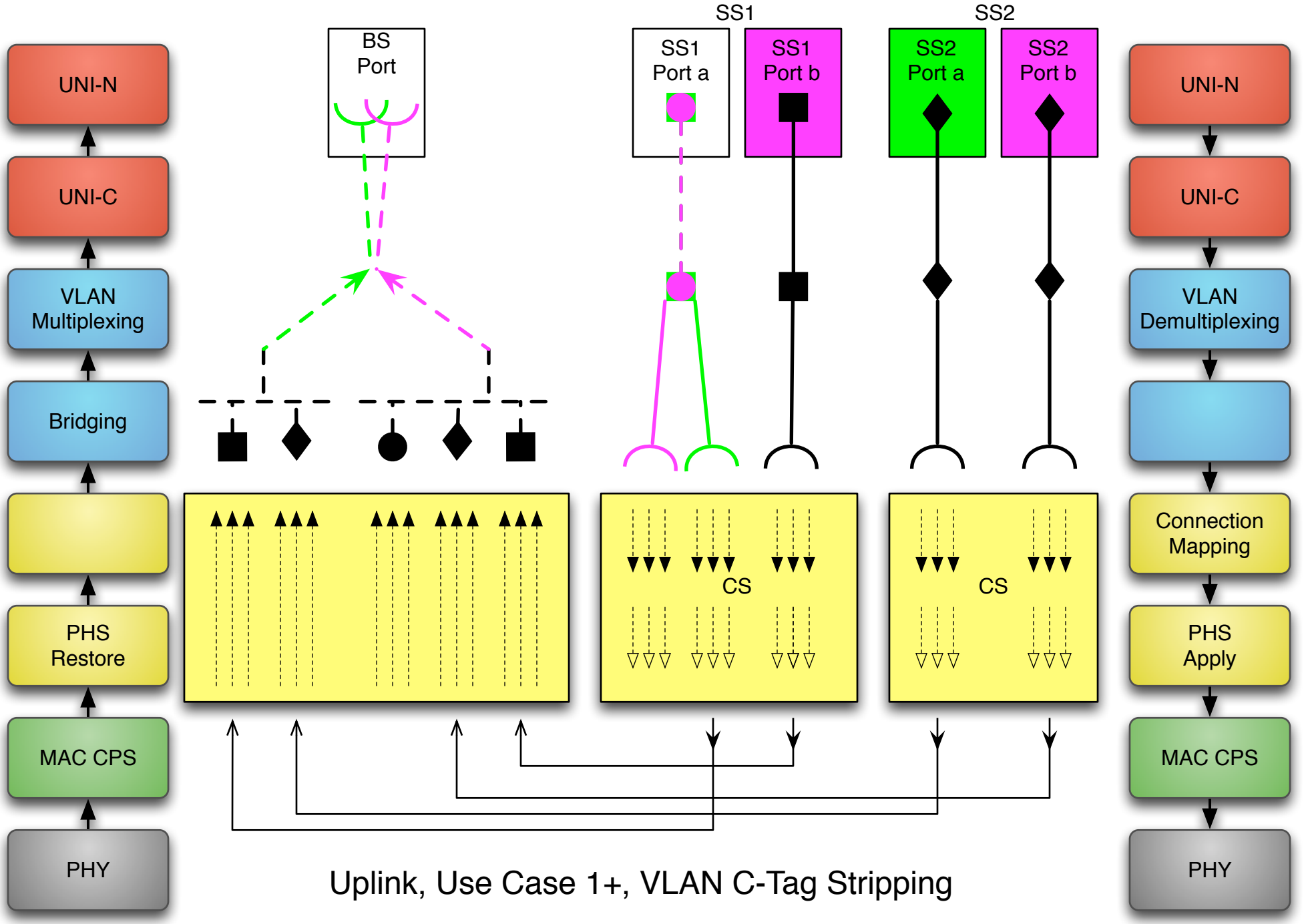

Uplink, Use Case 1+, VLAN C-Tag Stripping

Copyright © 2013 Consensii LLC

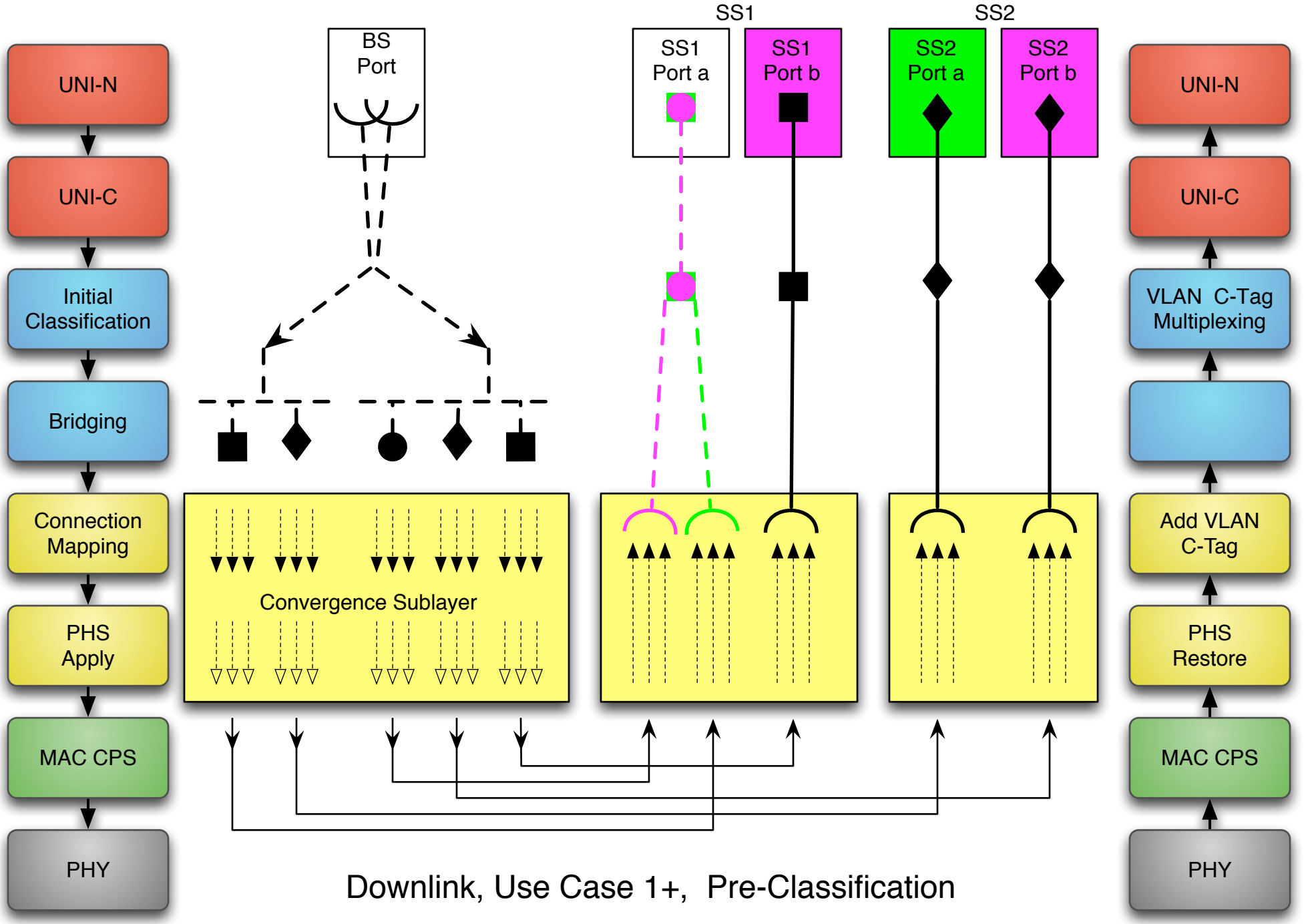

Downlink, Use Case 1+, Pre-Classification

Copyright © 2013 Consensii LLC

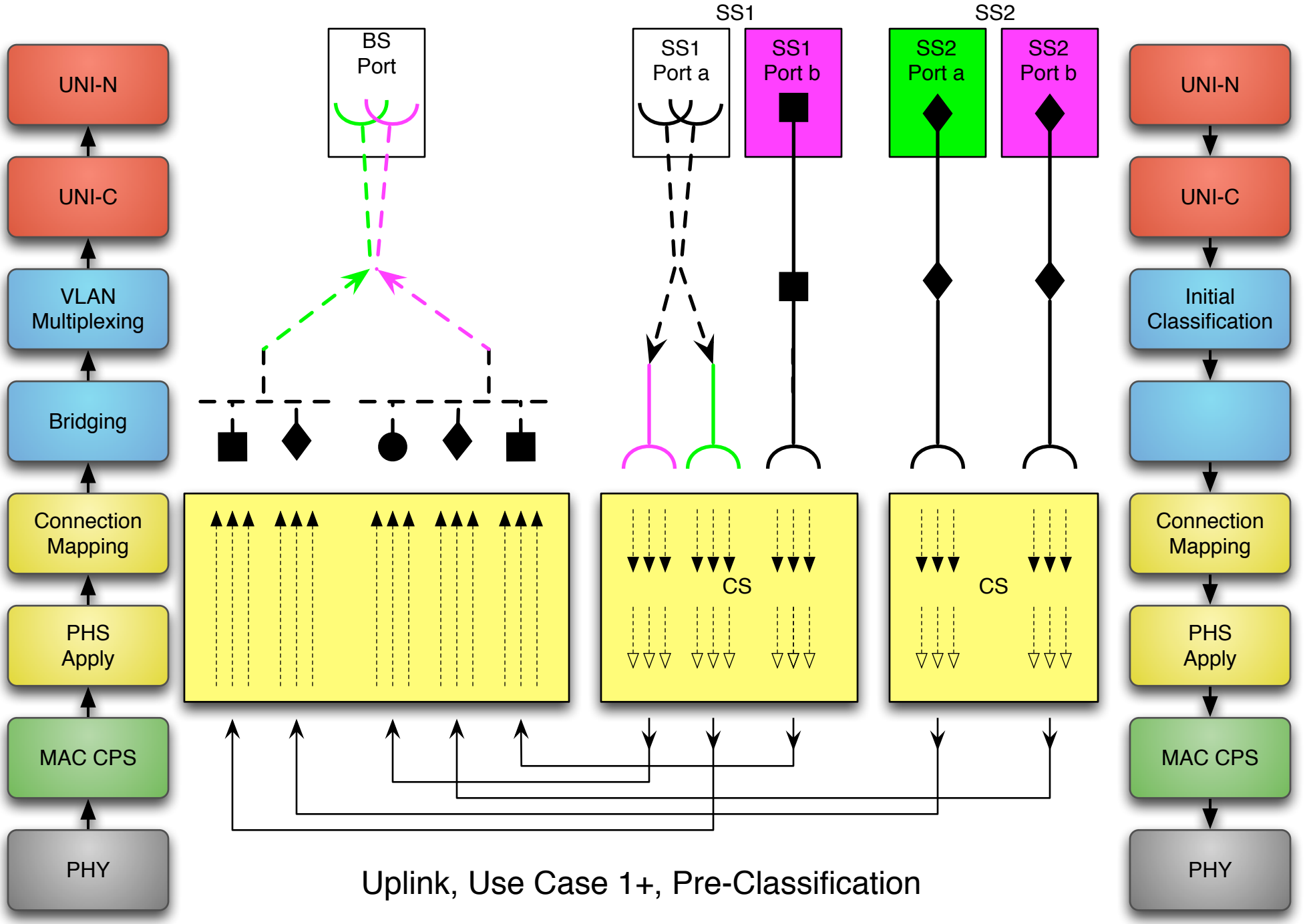

Uplink, Use Case 1+, Pre-Classification

Copyright © 2013 Consensii LLC

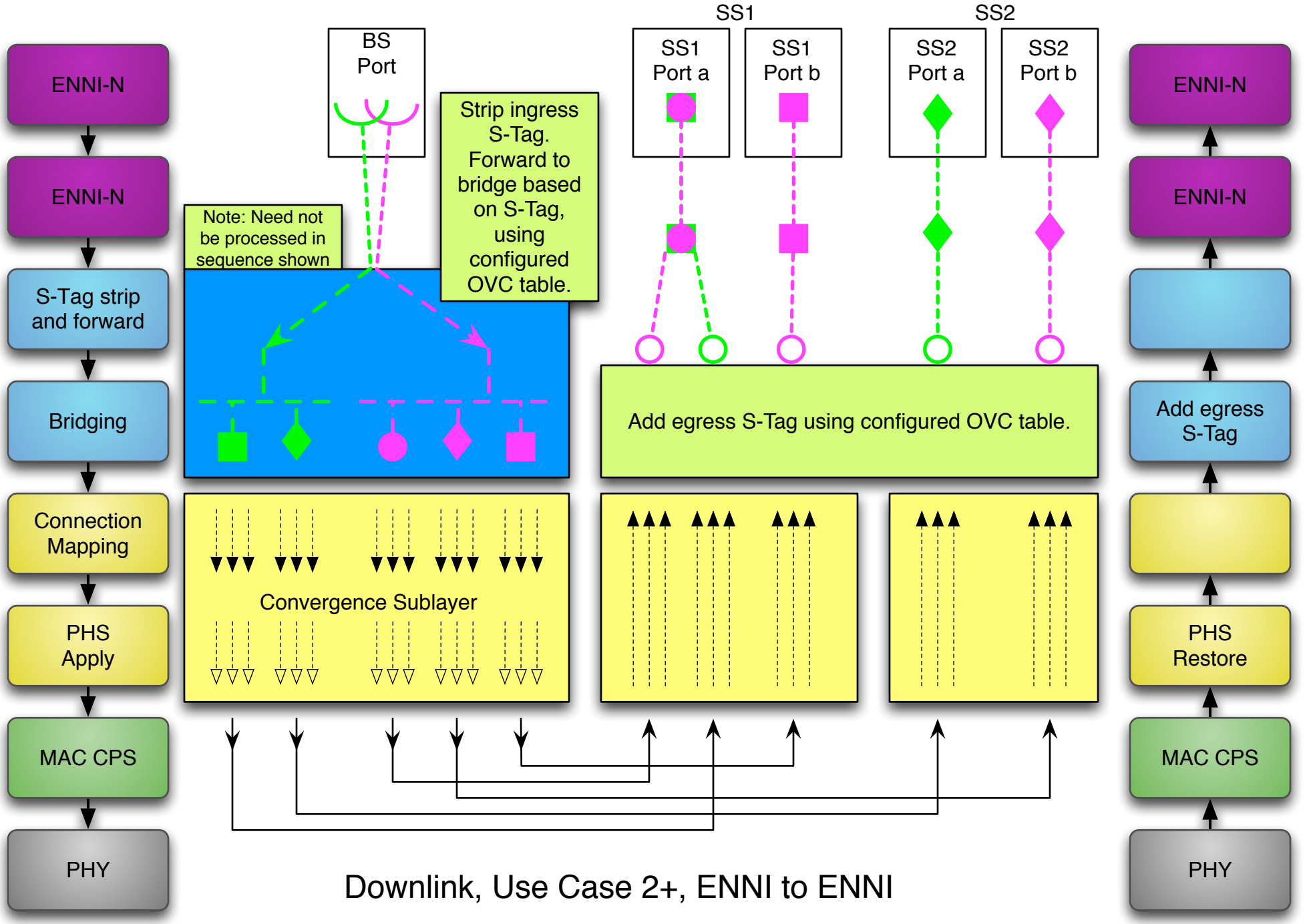

Downlink, Use Case 2+, ENNI to ENNI

Copyright © 2013 Consensii LLC

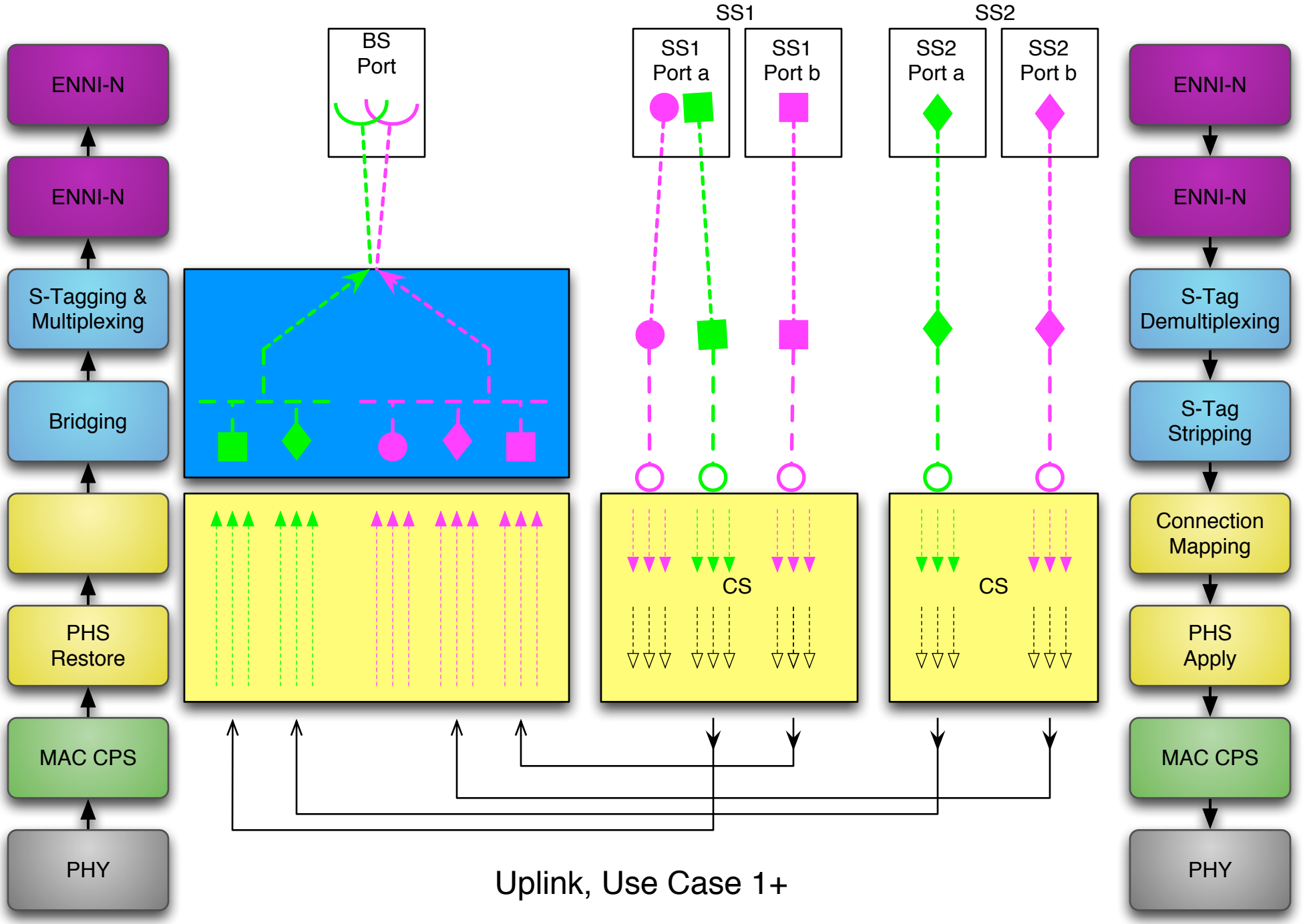

Uplink, Use Case 1+

Copyright © 2013 Consensii LLC

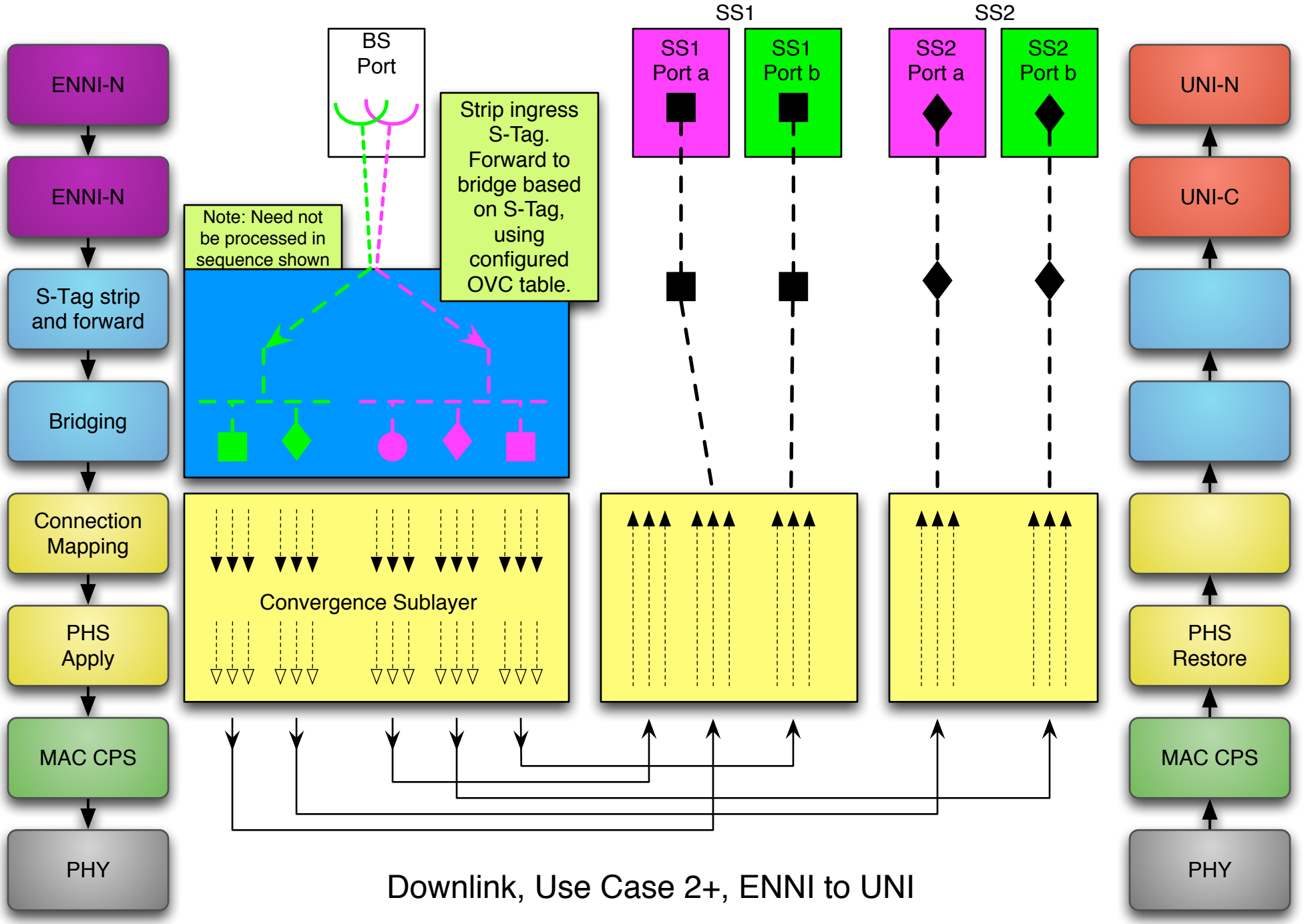

Downlink, Use Case 2+, ENNI to UNI

Copyright © 2013 Consensii LLC

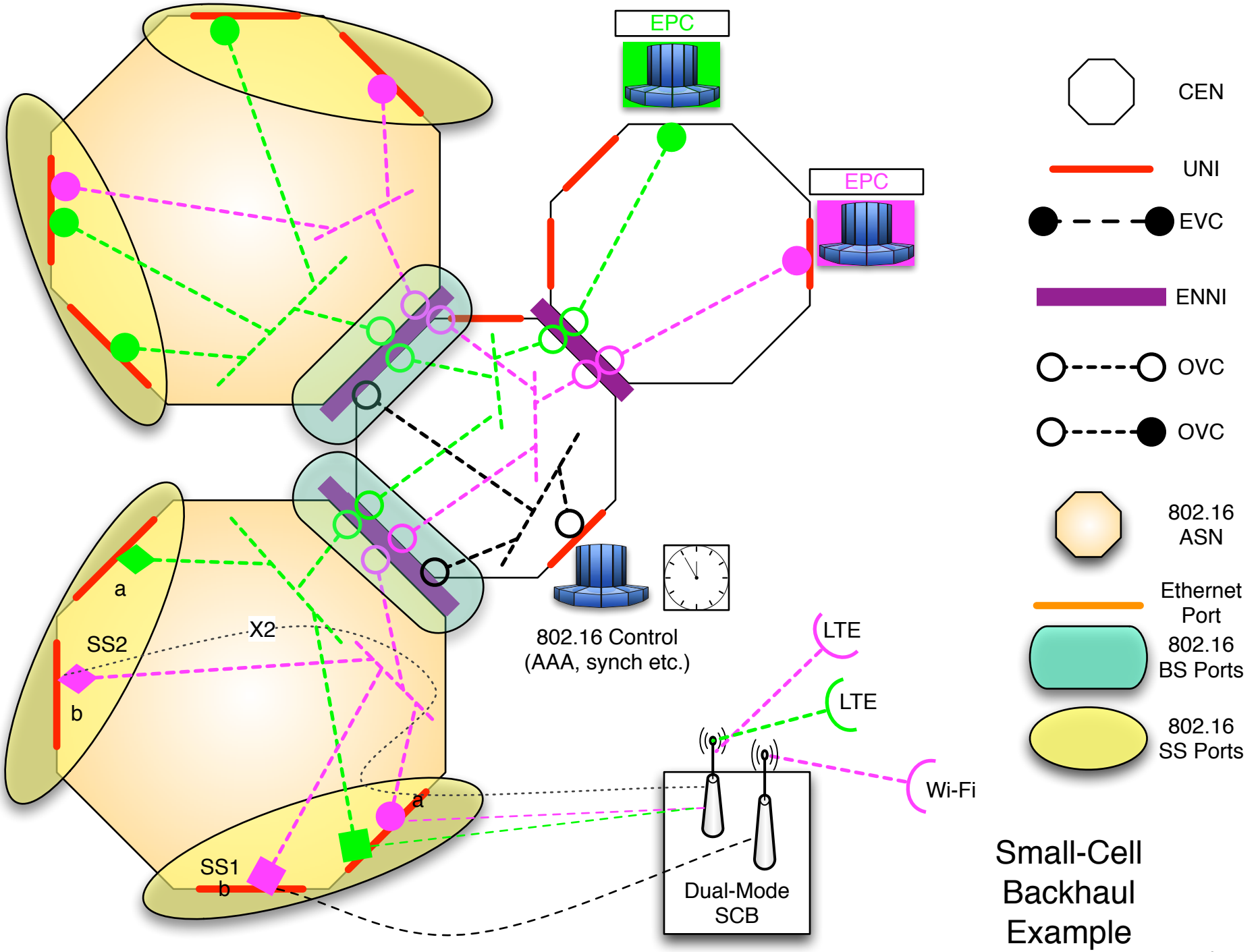

Small-Cell Backhaul Example

Copyright © 2013 Consensii LLC

Matching Connections and Ports

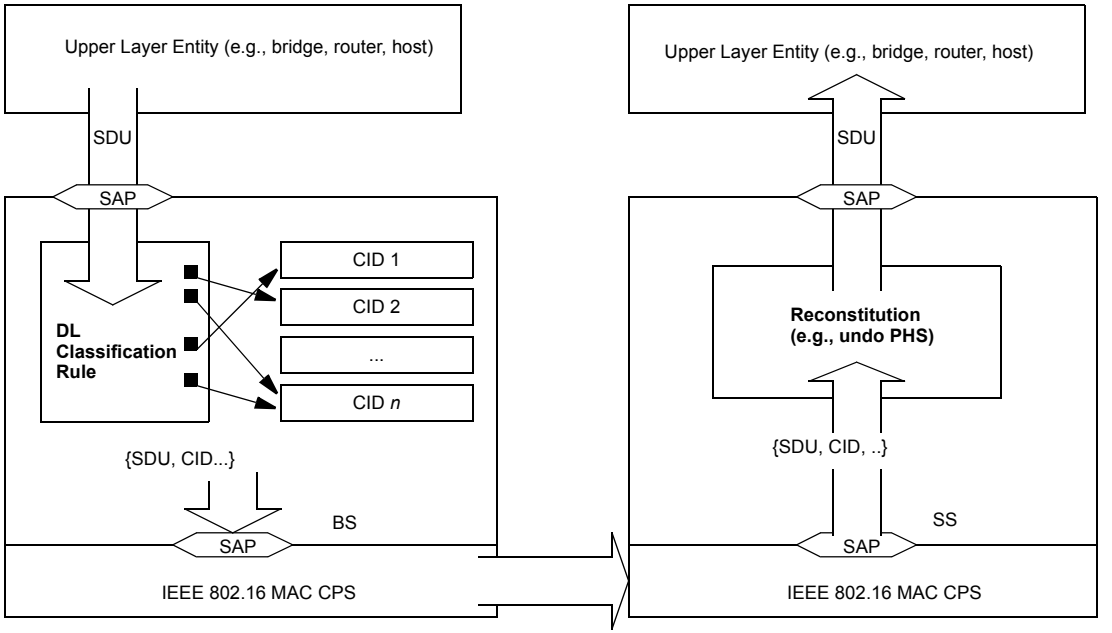

Figure 5-5—Classification and CID mapping (BS to SS)

Classification (IEEE Std 802.16-2012):
Properties of a Connection include:
- Connection ID (CID)
- SS ID
- QoS parameters
- Classification rules (with priorities)

During classification, Convergence Sublayer (CS) does:
- parse frame
- identify table of all applicable rules
  - all rules are eligible
- compares frame elements to rules, in priority order
- assigns frame to first CID that satisfies a rule

Classification (proposed enhancement):
Properties of a Connection include:
- Connection ID (CID)
- SS ID & global Port ID [could be SS ID & SS-Local Port ID]
- QoS parameters
- Classification rules (with priorities)

During classification, Convergence Sublayer (CS) does:
- parse frame
- identify table of all applicable rules
  - include only rules that map to the egress port
- compares frame elements to rules, in priority order
- assigns frame to first CID that satisfies a rule

Copyright © 2013 Consensii LLC

Needed IEEE 802.16 Enhancement: Bridging

- Specify bridging at BS port
  - Currently, IEEE Std 802.16k (amendment to 802.1D) specifies the means for 802.1D bridging service to operate with the IEEE 802.16 Packet Convergence Sublayer
  - Need to introduce bridging explicitly into the 802.16 architecture
  - Need to also specify operation of VLAN-aware Bridge supporting the 802.1Q ISS & EISS service
    - Consider use of service_access_point_identifier and connection_identifier service primitive parameters
  - Avoid additional bridging at the SS.

Needed IEEE 802.16 Enhancement: Port ID per Service Flow

- Add Port ID parameter to “Service flow encodings” (Table 11-53) to identify SS Port
  - Multiple service flows can service each Port
    - based on, for example, QoS or PHS issues
  - Need a globally-unique Port ID parameter
    - Could be SS ID plus unique SS-Local Port ID.
  - Associate Service Flow with global Port ID.
  - Bridge identifies incoming SS frames by source Port, and assigns outgoing SS frames to destination Port.
  - Any Connection associated with the correct global Port ID will deliver the frame to the right Port.

Needed IEEE 802.16 Enhancement: Bridge-Aware Packet CS

- Enhance “IEEE 802.3/Ethernet-specific part” of Packet Convergence Sublayer
- Ensure that the CS is aware of (a) the Bridge Port of the frame and (b) the Port ID of each connection
  - CS will identify Port to bridge at bridge ingress
  - CS empowered to assign MAC-bound PDUs only to connections associated with designated Bridge Port
  - Incoming CS data at SS will be forwarded to the correct port based on Port ID
  - Dedicate an SS port for SS management.

Applicability of GPCS

- IEEE Std 802.16 offers an alternative CS: General Packet Convergence Sublayer (GPCS)
- Detailed GPCS functionality is declared out of scope.
  - Specification of CS functionality is critical to meeting Carrier Ethernet QoS requirements.
- GPCS multiprotocol feature is not relevant to Carrier Ethernet.
- Carrier Ethernet demands a specific CS, not a generic one.

Support of Ethernet Hosts beyond the SS Port

- For multiple hosts beyond the SS Port, bridging beyond the SS Port is needed
  - Not part of the IEEE 802.16 SS
- The architecture supports the external bridge
- The architecture allows for some efficiency optimization
  - For example: For a frequently-addressed 802.3 MAC destination outside the SS, a Connection can be initiated for that destination alone in order to make use of payload header suppression, suppressing the destination address

Metro Ethernet Forum (MEF) functionality and attributes needed

- Carrier Ethernet requirements go well beyond the architecture.
- The Metro Ethernet Forum specifies many functionalities and attributes
- Many Carrier Ethernet 2.0 requirements are in:
  - Carrier Ethernet 2.0 Certification Blueprint
  - see also IEEE 802.16-13-0010
- First Carrier Ethernet 2.0 certifications: Jan 2013
  - All 4 service types: E-Line, E-LAN, E-Tree, E-Access

Carrier Ethernet 2.0 Summary (1) Key UNI Service Attributes

- Port-Based (EPL, EP-LAN, EP-Tree):
  - No Service Multiplexing: one service per port
  - All to One Bundling (all VLANs forwarded to service)
  - No ingress or egress bandwidth profile (BWP) per UNI
- VLAN-Based (EVPL, EVP-LAN, EVP-Tree):
  - Service Multiplexing allowed: multiple services per port
  - Bundling of VLANs onto a service allowed
    - Requires VLAN preservation

Carrier Ethernet 2.0 Summary (2) Key EVC Service Attributes

- At least one CoS is required
  - values/objectives for each performance attribute with objectives and parameters defined in MEF 23.1
  - See slides below beginning with “Carrier Ethernet QoS”
- Port-Based (EPL, EP-LAN, EP-Tree):
  - CE-VLAN ID Preservation
  - CE-VLAN CoS Preservation
- VLAN-Based (EVPL, EVP-LAN, EVP-Tree):
  - CE-VLAN ID Preservation: optional
  - CE-VLAN CoS Preservation: optional

Carrier Ethernet 2.0 Summary
(3) Key EVC per UNI Service Attributes

- Port-Based (EPL, EP-LAN, EP-Tree):
  - All Service Frames at the UNI must map to one EVC
- VLAN-Based (EVPL, EVP-LAN, EVP-Tree):
  - Specify mapping table of CE-VLAN IDs to EVC ID

Carrier Ethernet 2.0 Summary (4) Service OAM Frames

- Operations, Administration, and Maintenance
- Various Connectivity, Linktrace, and Loopback message handling requirements
- “Carrier Ethernet 2.0 Service OAM enables the subscriber and the service provider to check continuity of a given EVC across the entire service, to trace the path of a service or ping a target MEP (Maintenance association End Point) or configured MIP (Maintenance domain Intermediate Point), for subscriber and test MEG (Maintenance Entity Group) levels defined in MEF 30 ‘Service OAM FM Implementation Agreement’.”

Carrier Ethernet 2.0 Summary (5) E-Access Services

- E-Access: Point to Point OVC (ENNI/UNI)
  - Other OVC configurations not currently certifiable
- Many Attributes
  - UNI Service Attributes
  - ENNI Service Attributes
  - OVC per UNI Service Attributes
  - OVC Endpoint per ENNI Service Attributes
  - OVC Service Attributes
  - Service OAM Frames Handling

Carrier Ethernet 2.0 Backhaul

- MEF *Carrier Ethernet for Mobile Backhaul* Initiative is based on Carrier Ethernet 2.0 but introduces additional requirements specifically for backhaul purposes.
  - "New Mobile Backhaul Initiative to Resolve 4G/LTE Backhaul's Most Costly Challenge" calls out:
  - MEF 22.1 ("Mobile Backhaul Phase 2")
    - Indicates importance of network-based synchronization support, providing guidance through the paper "Packet Synchronization over Carrier Ethernet Networks for Mobile Backhaul – A Formula for Deploying IEEE 1588v2 and Synchronous Ethernet: Investigate – Test – Deploy."
    - specifies requirements on Service OAM, Ethernet OAM, and synchronization, along with other issues
  - MEF 23.1 ("Carrier Ethernet Class of Service – Phase 2")
    - See also MEF 23.1 overview slides

Carrier Ethernet QoS

- QoS is a core and complex facet of MEF specs
- Key concepts:
  - Bandwidth profile (BWP)
  - Information Rate
  - Burst Size
  - Committed vs Excess
  - Color
  - PCP
  - CoS
  - Performance Service Attributes
  - CoS Performance Objectives (CPOs)

Carrier Ethernet BWP Process

- Committed Information Rate (CIR), Committed Burst Size (CBS), Excess Information Rate (EIR), and Excess Burst Size (EBS) agreed by provider and subscriber (in SLA)
- Service Frames are observed
  - at ingress and/or egress
  - at UNI and/or EVC, or per CoS
    - 8-level CoS can by identified by 3-bit PCP field in C-Tag or S-Tag
- Service Frames are marked
  - Up to CIR/CBS: Green; delivered per performance objectives
  - Beyond CIR/CBS but up to EIR/EBS: Yellow; delivered as best effort
  - Beyond EIR/EBS: Red; discarded

Performance Service Attributes

- Performance Service Attributes:
  - QoS description, per CoS
- MEF 23.1 specifies 3 CoS Labels: H, M, L
- CoS Performance Objectives (CPOs)
  - Frame Delay, Mean Frame Delay, Inter-Frame Delay Variation, Frame Delay Range, Frame Loss Ratio
  - Specified in 4 “Performance Tiers” for each CoS Label
    - Some content in MEF 23.1 remains TBD

Conclusions

- Improvements to the IEEE 802.16-2012 air interface are required for Carrier Ethernet 2.0 support
- With a few improvements, IEEE 802.16 can be fully integrated into a Carrier Ethernet 2.0 network and provide Wireless Carrier Ethernet 2.0.

The Way Forward

- Update IEEE 802.16 Ethernet Packet CS to recognize Etherport ports and explicitly support 802.1Q bridging
- Map CE 2.0 CoS and QoS parameters to IEEE 802.16 QoS
- Provide for management and configuration control

References

- IEEE Std 802.16-2012
- IEEE Std 802.1D, amended by IEEE 802.16k-2007
- IEEE Std 802.1Q
- Contribution IEEE 802.16-13-0010
- RFC 5692 (“Transmission of IP over Ethernet over IEEE 802.16 Networks”)
- MEF Technical Specifications
- MEF Carrier Ethernet 2.0 Certification Blueprint
- MEF: New Mobile Backhaul Initiative to Resolve 4G/LTE Backhaul’s Most Costly Challenge
- MEF: Packet Synchronization over Carrier Ethernet Networks for Mobile Backhaul – A Formula for Deploying IEEE 1588v2 and Synchronous Ethernet: Investigate – Test – Deploy